REV.	DESCRIPTION	DRAWN	DATE
1	INITIAL RELEASE	MIchael	2025/05/5

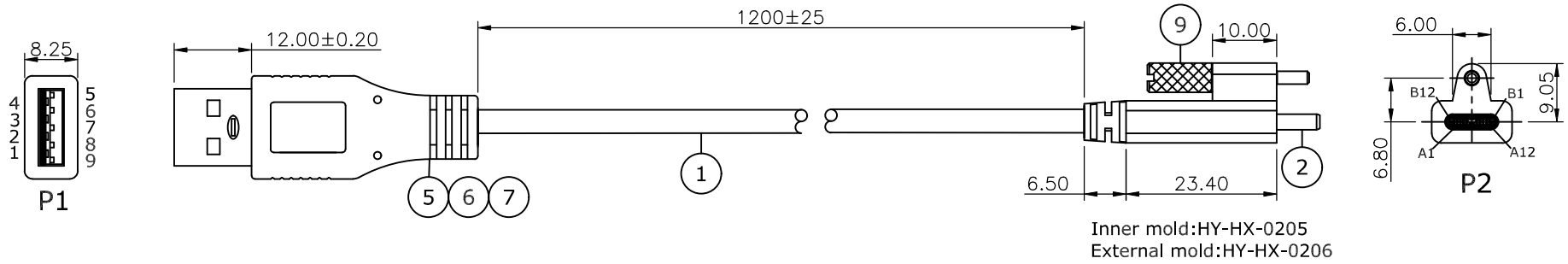

Inner mold:HY-HX-0205
External mold:HY-HX-0206

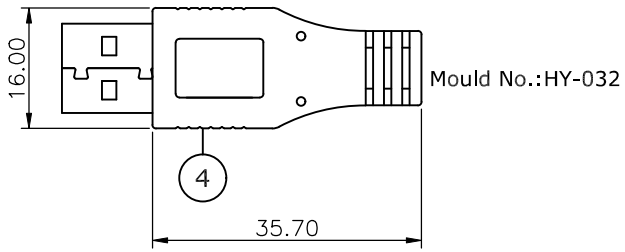

Mould No.:HY-032

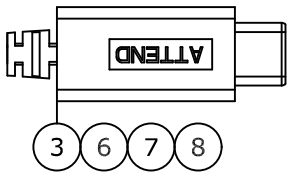

NOTES:

1. All cable 100% testing, any open, mis-wiring, short & intermittent are not permitted
2. RoHS compliance

TEST CONDITION:

1. 100% OPEN SHORT & MISWIRE TEST。
2. CONDUCTOR RESISTANCE: 3 Ohms Max。
3. INSULATION RESISTANCE: 5M Ohms Min。

PIN ASSIGNMENT

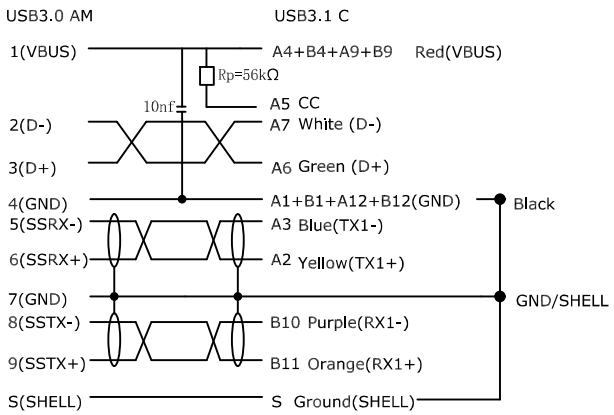

NO.	PART NAME	DESCRIPTION
9	Screw	Screw M2
8	Double-sided	Double-sided conductive copper foil 22*30*0.06mm
7	Line tail	PVC 50P
6	External mold	PE
5	Wire Clamp	30#-24# Wire Clamp 3.0 Common Wire Single Layer Wire Clamp
4	USB 3.0	USB 3.0 AM blue plastic core nickel plated PIN
3	Wire Clamp	32#-24# Wire Clamp Single Layer Wire Clamp
2	Conn.	C-TYPE stretch case 3.2 version resistor 56K
1	CABLE	USB3.2(1P*30#+DAM)*2+1P*30#+2C*24#+F ADB OD:4.5mm L=1200 10G

UNLESS OTHERWISE SPECIFIED TOLERANCE

UNIT:	DECIMAL	LINEAR	ANGLES
mm	X.	±0.50	±5°
	X.X	±0.25	±3°
	X.XX	±0.12	±1°

ATTEND
www.attend.com.tw

DRAWN	Michael	2025/05/5	DRAWN NAME: USB 3.2 Gen1 Type C Single Screw to Type A, Black PVC, OD:4.5mm, L=120CM
CHECKED	Fros	2025/05/5	
APPROVED	Ken	2025/05/5	PRODUCT NO. US-APCP-12001
SCALE 1/1	SHEET 1/1	SIZE A4	FILE NAME US-APCP-12001_B_1