REV.	DESCRIPTION	DRAWN	DATE
1	INITIAL RELEASE	FROS	2025/07/11

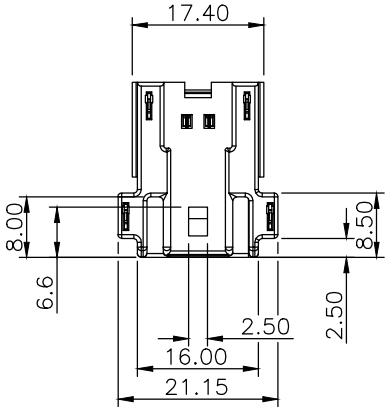

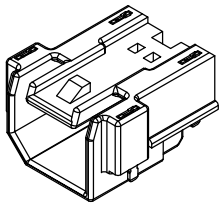

Notes

1. Current: 5A
2. Voltage: 48V
3. Insulation Resistance: 100MΩ Min.
4. Withstanding Voltage: 100V
5. Operation Temperature: -40°C to 105°C

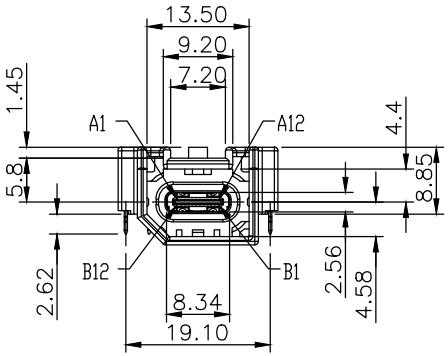

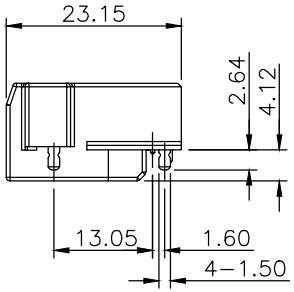

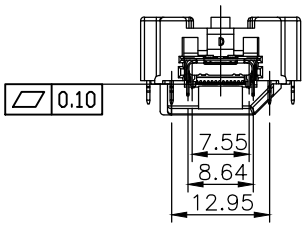

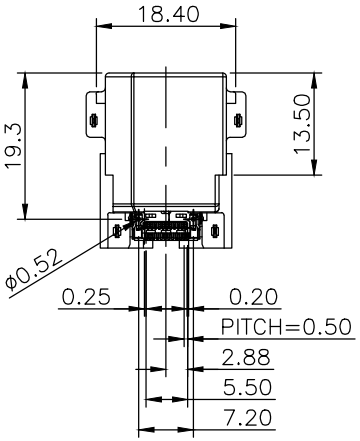

NO.	PART NAME	DESCRIPTION
4	SHELL	Stainless steel, 50u" Min. nickel plating
3	MID PLATE	Stainless steel, 50u" Min. nickel plating
2	CONTACT	Copper alloy, contact area: 30u" gold, solder area: 100~200u" tin , under plating nickel
1	HOUSING	High temp thermoplastic, UL94V-0, black

UNLESS OTHERWISE SPECIFIED TOLERANCE

UNIT:	DECIMAL	LINEAR	ANGLES
mm	X.	±0.50	±5°
	X.X	±0.25	±3°
	X.XX	±0.15	±1°

ATTEND

www.attend.com.tw

DRAWN	Fros	2025/07/11
CHECKED	Tim	2025/07/11
APPROVED	Ken	2025/07/11

DRAWN NAME: Automotive USB4 type C Receptacle Mid Mount w/Cover, 30u"

PRODUCT NO. 217C-AG06

SCALE	SHEET	SIZE
1/1	1/2	A4

FILE NAME 217C-AG06_B_1

REV.	DESCRIPTION	DRAWN	DATE

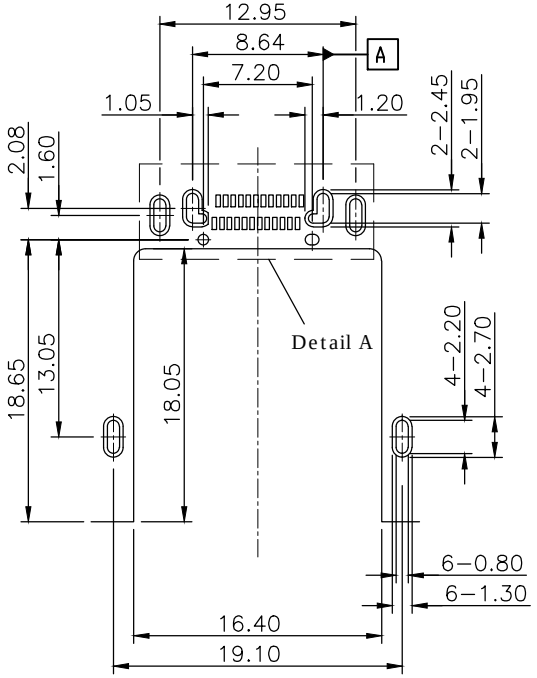

Recommended Layout (top view)
General Tolerance: ±0.05mm

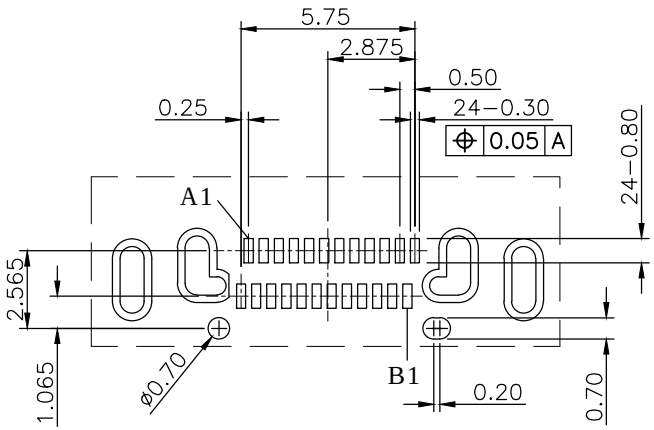

DETAIL A
SCALE 2:1

A1	A2	A3	A4	A5	A6
GND	TX1+	TX1-	VBUS	CC1	D+
GND	RX1+	RX1-	VBUS	SBU2	D-
B12	B11	B10	B9	B8	B7

A7	A8	A9	A10	A11	A12
D-	SBU1	VBUS	RX2-	RX2+	GND
D+	CC2	VBUS	TX2-	TX2+	GND
B6	B5	B4	B3	B2	B1

UNLESS OTHERWISE SPECIFIED TOLERANCE

UNIT:	DECIMAL	LINEAR	ANGLES
mm	X.	±0.50	±5°
	X.X	±0.25	±3°
	X.XX	±0.15	±1°

ATTEND
www.attend.com.tw

DRAWN	Fros	2025/07/11
CHECKED	Tim	2025/07/11
APPROVED	Ken	2025/07/11

SCALE	SHEET	SIZE
N/A	2/2	A4

DRAWN NAME: Automotive USB4 type C Receptacle Mid Mount w/Cover, 30u"

PRODUCT NO. 217C-AG06

FILE NAME 217C-AG06_B_1