REV.	DESCRIPTION	DRAWN	DATE
1	INITIAL RELEASE	FROS	2025/06/10

NOTES:
1. Rated current: 4A
2. Rated voltage: 60V
3. Operation temperature: -40°C to +85°C

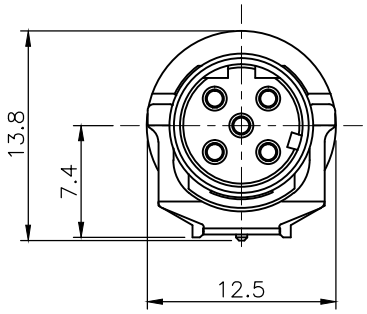

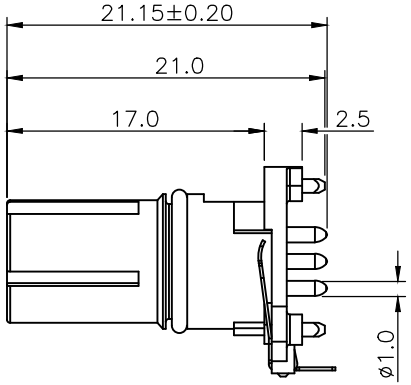

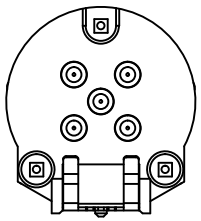

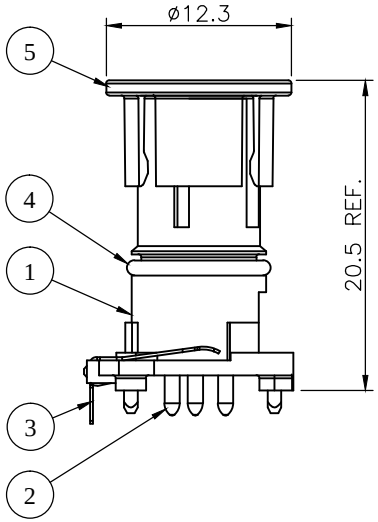

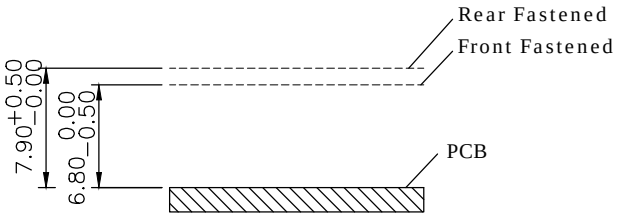

Recommended Panel Distance

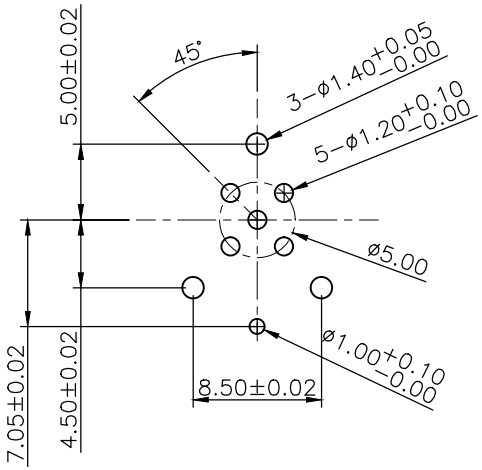

Recommended Layout (Top View)
PCB Thickness: 1.6mm
General Tolerance: ±0.05mm

NO.	PART NAME	DESCRIPTION
3	CAP	PA66
3	GROUND	Phosphor bronze, nickel plated
3	ORING	VITON
2	CONTACT	Brass, Gold flash plating over Nickel
1	HOUSING	PA9T, UL94V-0, Black

UNLESS OTHERWISE SPECIFIED TOLERANCE

UNIT:	DECIMAL	LINEAR	ANGLES
mm	X.	±0.50	±5°
	X.X	±0.25	±3°
	X.XX	±0.12	±1°

ATTEND
www.attend.com.tw

DRAWN	Fros	2025/06/10
CHECKED	Tim	2025/06/10
APPROVED	Ken	2025/06/10

DRAWN NAME: M12 Two Piece Insert, D-Code, 5Pin Female DIP Type

PRODUCT NO.	216D-05FSA
FILE NAME	216D-05FSA_B_1

SCALE	SHEET	SIZE
2/1	1/1	A4