REV.	DESCRIPTION	DRAWN	DATE
1	INITIAL RELEASE	TIM	2025/03/17

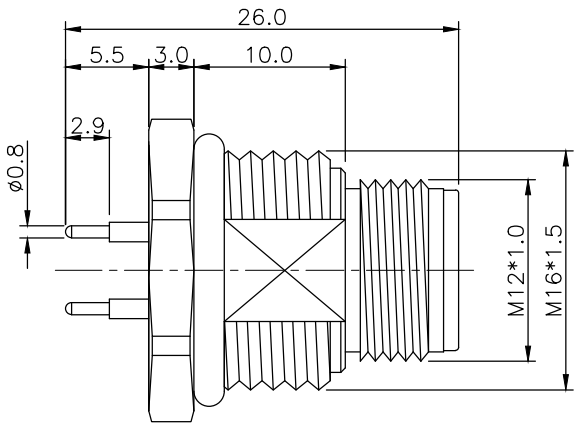

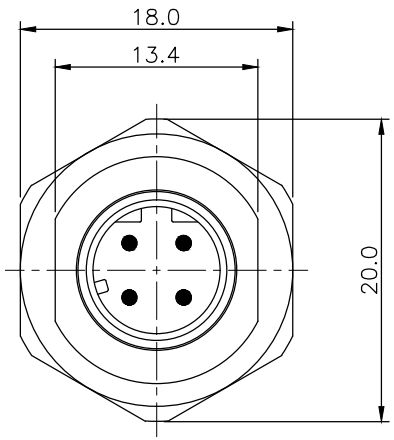

SPECIFICATION:

Current Rating: 4A
Voltage Rating: 250V
Waterproof: IP67
Operation Temperature: -40°C to 85°C

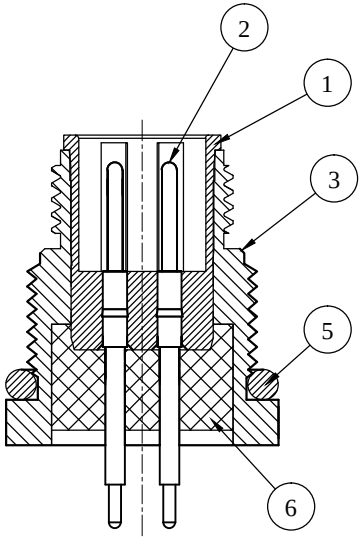

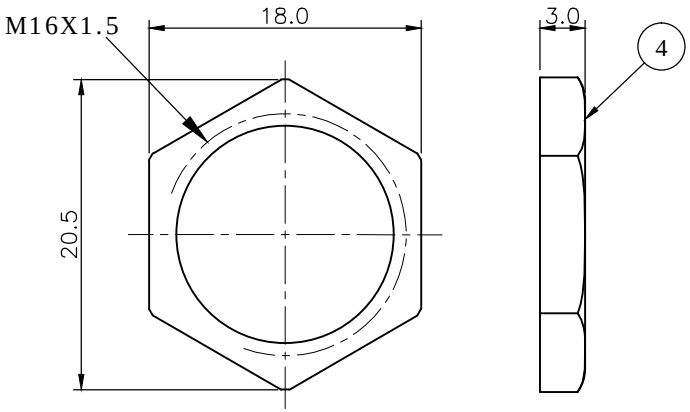

NUT

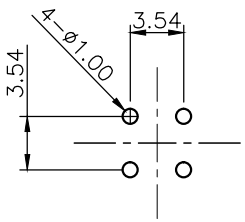

RECOMMEND PCB LAYOUT

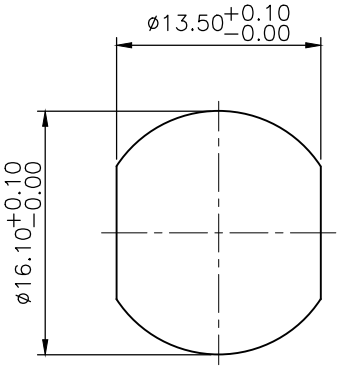

RECOMMEND PANEL CUT OUT

NO.	PART NAME	DESCRIPTION
6	Epoxy	Black
5	ORING	EPDM, Black
4	NUT	Brass, Nickel plating
3	SHELL	Brass, Nickel plating
2	CONTACT	Brass, Gold plating under Nickel
1	HOUSING	PBT, UL94V-0, Black

UNLESS OTHERWISE SPECIFIED TOLERANCE

UNIT:	DECIMAL	LINEAR	ANGLES
mm	X.	±0.50	±5°
	X.X	±0.25	±3°
	X.XX	±0.12	±1°

ATTEND

WWW.ATTEND.COM.TW

DRAWN	Tim	2025/03/17
CHECKED	Fros	2025/03/17
APPROVED	Ken	2025/03/17

DRAWN NAME: M12 D- Code Receptacle, 4Pin Male DIP Type Front Fastened

PRODUCT NO. 216D-04MSF

SCALE	SHEET	SIZE	FILE NAME
2/1	1/1	A4	216D-04MSF_B_1