SWITCH CIRCUIT	
WHEN CARD IS EJECTED	WHEN CARD IS INSERTED

MATERIAL AND FINISH AS BELOW					
A	Housing	PBT UL94V-0, Color: Black	E	Epoxy Base	Epoxy Black
B	Contact	Brass C3604, Contact Area:10u″ Gold Plating Over Nickel	F	Main Body	Aluminum alloy , Nickel Plating
C	Shell	Aluminum alloy , Nickel Plating	G	O-Ring	Silicone Black
D	Nut	Aluminum alloy , Nickel Plating	H	Gland Cage	POM White

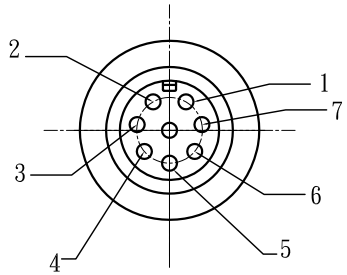

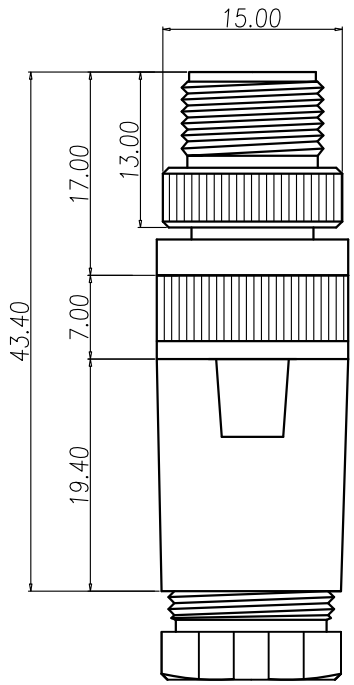

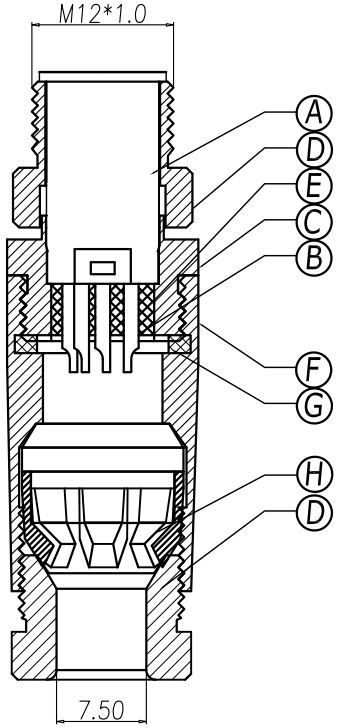

SPECIFICATION:

1. ELECTRICAL

1.1 Current Rating: 2A per pin

1.2 Voltage Rating: 30V

1.3 Water Proof: IP X7

2. ENVIRONMENTAL

△2 2.1 Operating temperature range: -40℃~+85℃

P1	P2	P3	P4	P5	P6	P7	P8	P9	P10	P11	P12
PIN ASSIGNMENT											

PRODUCT NO.	DESCRIPTION
216A-08MF0	M12 A Code Plug for Cable, 8Pin Male For Field Installable, Contact: 10u″ Gold Plating

REV.	DESCRIPTION	DATE	REV.	DESCRIPTION	DATE
△3	ECR220421001	2022/04/22			
△2	ECR1700027	2017/10/26			
△1	INITIAL RELEASE	2013/12/24			

UNLESS OTHERWISE SPECIFIED TOLERANCE

ANGLES	ANG.	±5°
LINEAR	0.	±0.3
	0.0	±0.25
	0.00	±0.20
SCALE	AS SHOWED	UNIT: mm
DRAWN	Willis	2013/12/24
CHECKED	Angel	2013/12/24
APPROVED	Ken	2013/12/24

ATTEND

www.attend.com.tw

DRAWN NAME: M12 A- Code Plug for Cable 8Pin Male For Field Installable

PRODUCT NO. 216A-08MF0

SIZE A4 REV. 1.0

FILE NAME 216A-08MF0_B_3

REV.	DESCRIPTION	DRAWN	DATE

1. Pre-assembled

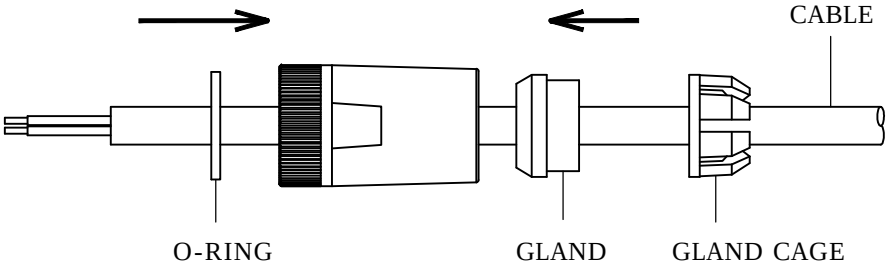

2. Wire Processing

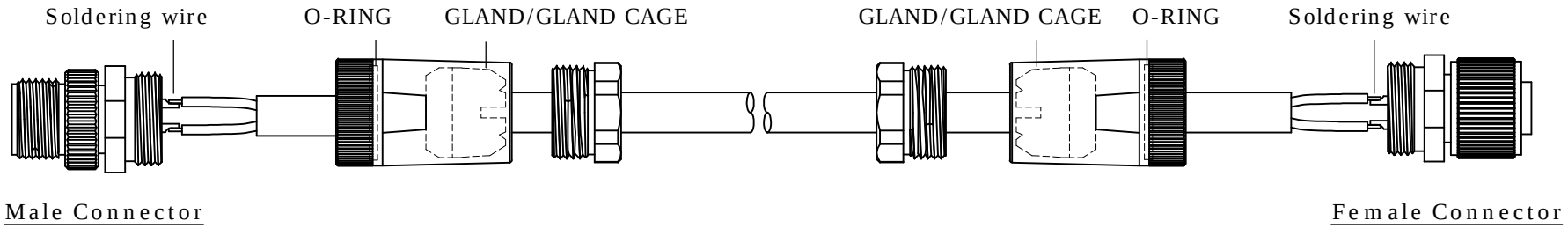

3. Setting Connector

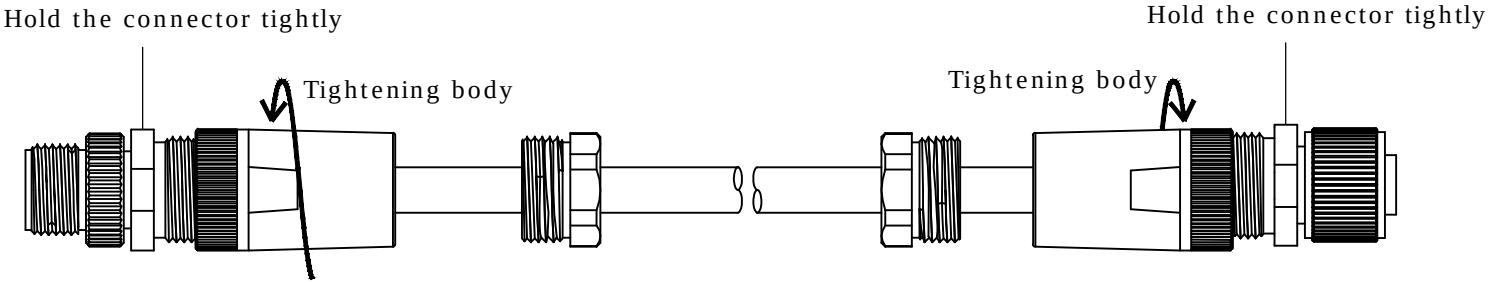

4. Assembly Sealing Nut

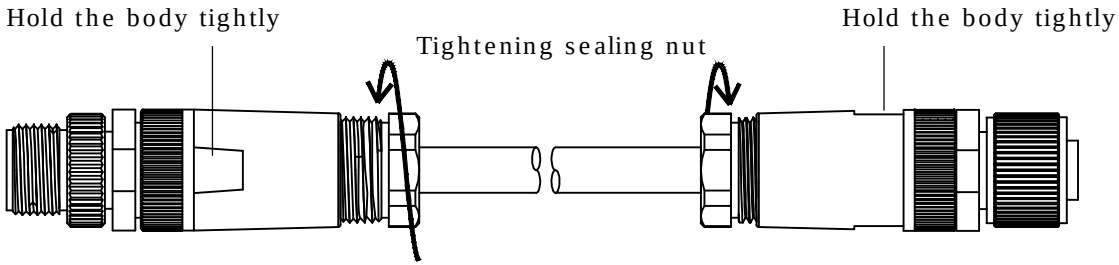

UNLESS OTHERWISE SPECIFIED TOLERANCE				
UNIT: mm	DECIMAL	LINEAR	ANGLES	ATTEND
	X.	±0.50	±5°	
	X.X	±0.25	±3°	
	X.XX	±0.12	±1°	WWW.ATTEND.COM.TW
DRAWN	Tim	2025/02/25		DRAWN NAME: M Series For Male Field Installable Type Design Guide
CHECKED	Fros	2025/02/25		
APPROVED	Ken	2025/02/25		PRODUCT NO.
	SCALE	SHEET 1/1	SIZE A4	FILE NAME: M Series MF0_DG