SWITCH CIRCUIT	
WHEN CARD IS EJECTED	WHEN CARD IS INSERTED

MATERIAL AND FINISH AS BELOW					
A	Housing	PBT UL94V-0, Color: Black	E	O-Ring	NBR Black
B	Contact	Brass C3604, Contact Area:10u″ Gold Plating Over Nickel	F	O-Ring	EPDM Black
C	Shell	Brass C3604, Nickel Plated	G	Epoxy Base	Epoxy Black
D	Nut	Brass C3604, Nickel Plated	H		

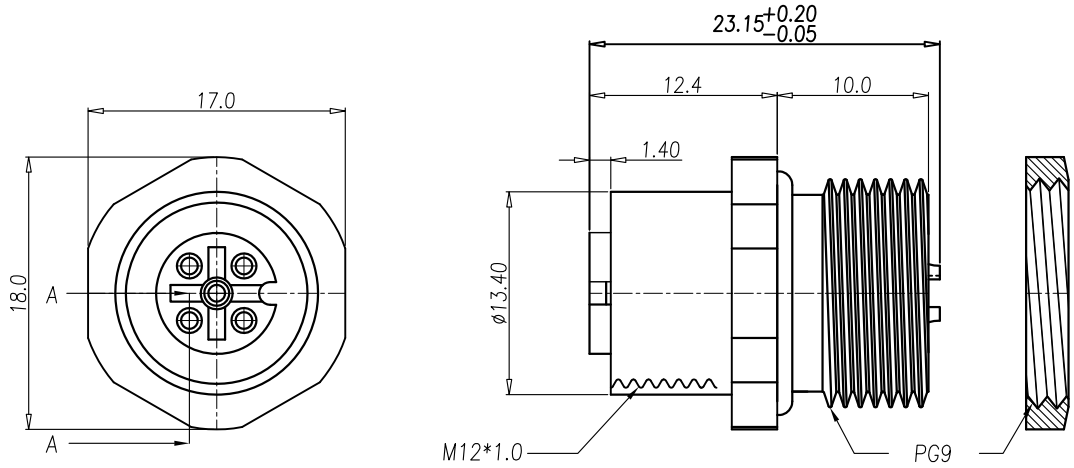

SPECIFICATION:

1. ELECTRICAL

1.1 Current Rating: 4A per pin

1.2 Voltage Rating: 60V

1.3 Water Proof: IPX7

2. ENVIRONMENTAL

△2 2.1 Operating temperature range: -40℃~+85℃

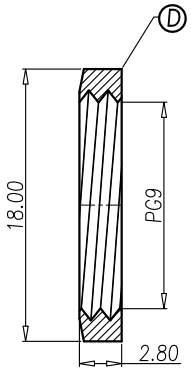

NUT

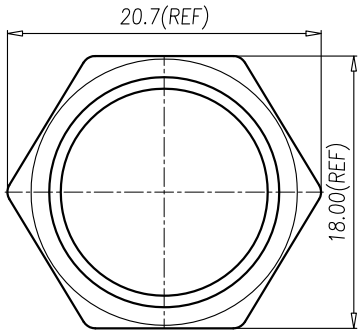

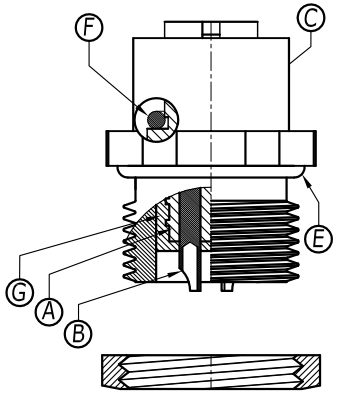

SECTION A–A

P1	P2	P3	P4	P5	P6	P7	P8	P9	P10	P11	P12
PIN ASSIGNMENT											

PRODUCT NO.	DESCRIPTION
216A-05FAR	M12 A Code 5Pin Receptacle, Female Solder Type, Rear Fastened, Contact: 10u″ Gold Plating

REV.	DESCRIPTION	DATE
△3	ECR220421001	2022/04/21
△2	ECR1700027	2017/10/26
△1	INITIAL RELEASE	2013/12/24

REV.	DESCRIPTION	DATE

UNLESS OTHERWISE SPECIFIED TOLERANCE

ANGLES	ANG.	±5°
LINEAR	0.	±0.3
	0.0	±0.25
	0.00	±0.20
SCALE	AS SHOWED	UNIT: mm
DRAWN	Willis	2013/12/24
CHECKED	Angel	2013/12/24
APPROVED	Ken	2013/12/24

SIZE A4 REV. 1.0

ATTEND

www.attend.com.tw

DRAWN NAME: M12 A- Code 5Pin Receptacle Female Solder Type, Rear Fastened

PRODUCT NO. 216A-05FAR

FILE NAME 216A-05FAR_B_3

REV.	DESCRIPTION	DRAWN	DATE

1. Wire Processing

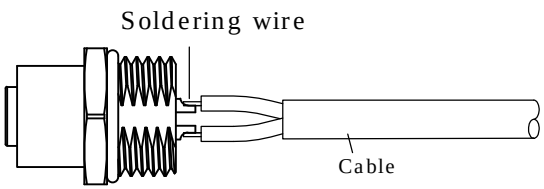

2. Installation Direction

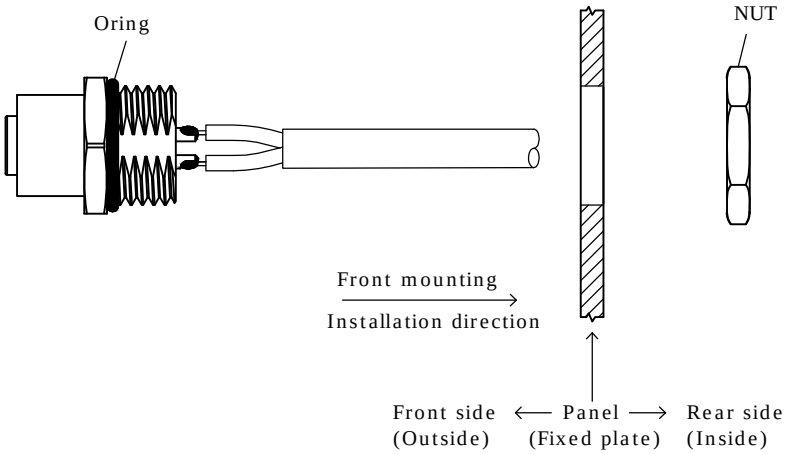

3. Connector Mated to Panel Mount

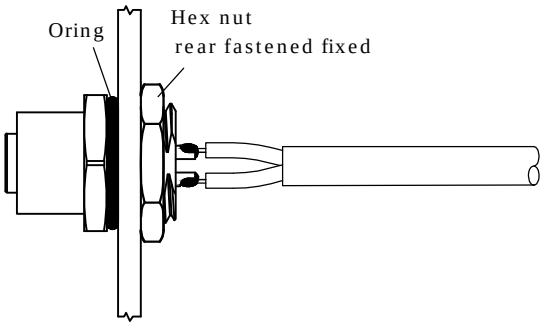

UNLESS OTHERWISE SPECIFIED TOLERANCE				
UNIT: mm	DECIMAL	LINEAR	ANGLES	ATTEND
	X.	±0.50	±5°	
	X.X	±0.25	±3°	
	X.XX	±0.12	±1°	WWW.ATTEND.COM.TW
DRAWN	Tim	2025/02/25		DRAWN NAME: M Series For Female Solder Type Rear Fastened Design Guide
CHECKED	Fros	2025/02/25		
APPROVED	Ken	2025/02/25		PRODUCT NO.
	SCALE	SHEET 1/1	SIZE A4	FILE NAME M Series FAR_DG