立威科技股份有限公司 Attend Technology Inc.
新北市汐止區新台五路一段81號10樓之六
10F-6, No.81, Sec.1, Xintai 5th Rd., Xizhi-Dist., New Taipei City 221, Taiwan, R.O.C.
TEL 886 2 2698 7028 FAX 886 2 2698 7078 WEBSITE www.attend.com.tw

SPECIFICATION AND PERFORMANCE

Series	230D-PSX01	File	230D-PSX01_Spec_1	Date	2026/03/05

Scope:

This specification covers the requirements for product performance, test methods and quality assurance provisions of below 230D-PSX01

Performance and Descriptions:

The product is designed to meet the electrical, mechanical and environmental performance requirements specification. Unless otherwise specified, all tests are performed at ambient environmental conditions.

RoHS:

All material in according with the RoHS environment related substances list controlled.

MATERIALS		
NO.	PART NAME	DESCRIPTION
1	HOUSING	Nylon, PA or equal
2	INSULATOR	Thermoplastic, black
3	CONTACT	Copper alloy, 6u" gold plating on contact area, tin plating on solder area, under plating nickel.
4	OUTER SHELL	Zinc alloy, tin plating over nickel

RATING	
Rated Current	1 A
Rated Voltage	335V
Operating Temperature	-40°C ~105°C
Storage Temperature	-40°C ~105°C
Durability	25 Min.

Signal Integrity		
Item	Requirement	Test Condition
Impedance	50Ω	DIN EN 60512-25-7
Frequency	9 GHz	DIN EN 60512-25-2
Return Loss	≧ 25dB DC< f ≦ 3 GHz ≧ 20dB 3 GHz < f ≦ 6 GHz ≧ 12dB 6 GHz < f ≦ 9 GHz	DIN EN 60512-25-5

The information contained herein is exclusive property of Attend. Do not copy and print except that Attend accepts. 本文件係屬立威科技股份有限公司所有；非經同意，不得以任何覆寫、拷貝、翻印等方式私自據有。亦不得擅加毀損、塗改。

立威科技股份有限公司 Attend Technology Inc.
新北市汐止區新台五路一段81號10樓之六
10F-6, No.81, Sec.1, Xintai 5th Rd., Xizhi-Dist., New Taipei City 221, Taiwan, R.O.C.
TEL 886 2 2698 7028 FAX 886 2 2698 7078 WEBSITE www.attend.com.tw

<table>
<tr><th colspan="3">ELECTRICAL</th></tr>
<tr><th>Item</th><th>Requirement</th><th>Test Condition</th></tr>
<tr><td>Maximum Current Rating</td><td>1. Non-Pass/Fail Nature: This is not a pass/fail test; the data is primarily used to develop derating curves for each terminal/wire size.
2. Sample Performance: For the ten (10) conditioned samples, the current rating must be within 90% of the current rating of the unconditioned samples of the same wire size.
3. Derating Calculation: The final derating curve must be created by reducing the base curve current values by 20% (i.e., 80% of the base curve).
4. Physical Limits: The derating curve is also strictly limited by the current carrying capability (ampacity) of the specific cable used.
5. Thermal Stability: Measurements are only valid when temperature fluctuation is less than 1 °C minute</td><td>SAE/USCAR-2</td></tr>
<tr><td>Dry Circuit Resistance</td><td>1. Attach micro-ohmmeter leads to locations A, B, and C as illustrated in Figure 18, to the terminated test leads.
2. Mate the terminated pairs. Measure the resistance across A to B and B to C using instrumentation which determines resistance by either the offset compensation or current reversal methods.
3. Calculate the combined resistance of the terminal conductor attachments and the interface with the following formula:
$R_{\text{Total Connection}} = R_{(DE)} = R_{(AB)} - R_{(BC)}$
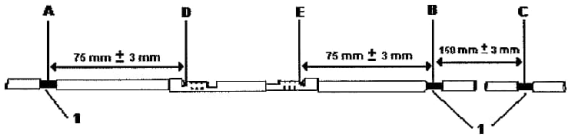

Figure 18: In-Line Circuit Lead Location

Table 11: Maximum Resistance Values
<table>
<tr><th>Nominal Male Terminal Size Note 1</th><th>Total Connection Resistance Maximum Note 2, Note 3</th></tr>
<tr><td>0.5 mm</td><td>per CTS</td></tr>
<tr><td>≤ 0.64 mm</td><td>15.0 mΩ</td></tr>
<tr><td>≤ 1.5 mm</td><td>8.0 mΩ</td></tr>
<tr><td>≤ 2.8 mm</td><td>5.0 mΩ</td></tr>
<tr><td>≥ 6.35 mm</td><td>1.5 mΩ</td></tr>
</table>
Note 1: As defined by the male blade portion (width) of the TUT
Note 2: 1 mΩ = 1 mV/A
Note 3: Maximum allowable mVD = 50

Note: Values for other terminal sizes between 0.64 mm and 6.35 mm are calculated by interpolation. Terminal sizes outside of this range are usually for specialized use. The requirements for these terminals shall be set by the Responsible Engineer. In no case may the Total Connection Resistance exceed 20 mΩ</td><td>SAE/USCAR-2</td></tr>
</table>

The information contained herein is exclusive property of Attend. Do not copy and print except that Attend accepts. 本文件係屬立威科技股份有限公司所有；非經同意，不得以任何覆寫、拷貝、翻印等方式私自據有。亦不得擅加毀損、塗改。

立威科技股份有限公司 Attend Technology Inc.
新北市汐止區新台五路一段81號10樓之六
10F-6, No.81, Sec.1, Xintai 5th Rd., Xizhi-Dist., New Taipei City 221, Taiwan, R.O.C.
TEL 886 2 2698 7028 FAX 886 2 2698 7078 WEBSITE www.attend.com.tw

Voltage Drop	Total Connection Resistance ≤ 20 mΩ	SAE/USCAR-2
1008-Hour Current Cycling	The measured temperature of any mated terminal pair shall not exceed the temperature limit of the terminal and cable size combination under test The Total Connection Resistance calculated per Section 4.3.2 shall not exceed the values specified in Table 11	SAE/USCAR-2
Isolation Resistance	All measured isolation resistances shall be greater than 100 MΩ	500 VDC SAE/USCAR-2
Dielectric Strength	1. No dielectric breakdown or flash-over shall occur between cavities at any time during the test 2. No dielectric breakdown or flash-over shall occur between the cavities and the outside of a connector at any time during the test	1000 VRMS AC/1600 VDC, 60s SAE/USCAR-2

MECHANICAL		
Item	Requirement	Test Condition
Crack Corrosion	The surface shall be free of cracks	24 h exposure SAE/USCAR-2
Crimp/Weld Integrity	Crimp/Weld terminals must maintain electrical continuity and mechanical strength, with no cracks or excessive resistance	SAE/USCAR-21 SAE/USCAR-38
Terminal-to-Terminal Engagement Force	Documentation purposes only	SAE/USCAR-2
Terminal-to-Connector Engagement Force	1. For terminals with less than 1.0 mm^2 wire, the maximum engagement force to fully seat and lock the terminal shall be less than 15 N 2. For terminals with 1.0 mm^2 or larger wire, the maximum engagement force to fully seat and lock the terminal shall be less than 30 N	SAE/USCAR-2
TPA in Fully Seated Position	1. For terminals with less than 1.0 mm* wire, the minimum engagement force to fully seat and lock the terminal shall be 30 N or the terminal shall not be capable of being seated and locked due to interference between the TPA and the terminal 2. For terminals with 1.0 mm' wire, the minimum engagement force to fully seat and lock the terminal shall be 40 N or the terminal shall not be capable of being seated and locked due to interference between the TPA and the terminal	SAE/USCAR-2

The information contained herein is exclusive property of Attend. Do not copy and print except that Attend accepts. 本文件係屬立威科技股份有限公司所有；非經同意，不得以任何覆寫、拷貝、翻印等方式私自據有。亦不得擅加毀損、塗改。

立威科技股份有限公司 Attend Technology Inc.
新北市汐止區新台五路一段81號10樓之六
10F-6, No.81, Sec.1, Xintai 5th Rd., Xizhi-Dist., New Taipei City 221, Taiwan, R.O.C.
TEL 886 2 2698 7028 FAX 886 2 2698 7078 WEBSITE www.attend.com.tw

<table>
<tr><td></td><td>3. For terminals with greater than 1.0 mm" wire, the minimum engagement force to fully seat and lock the terminal shall be 60 N or the terminal shall not be capable of being seated and locked due to interference between the TPA and the terminal</td><td></td></tr>
<tr><td>Terminal-from-Connector Extraction Force</td><td>1. Attach the lead to the pull tester at a point less than 100 mm behind the rear of the terminal

2. Pull the lead at a uniform rate of (50 ± 10) mm/minute until pull-out occurs. Note the pull-out value and failure mode

Table 6: Minimum Extraction Force – Terminal from Connector Cavity
<table>
<tr><th>Terminal Size</th><th>Primary Lock Only</th><th>Primary Lock and TPA/PLR and Post-Moisture Conditioning per Section 4.2.5.4, Item 8</th><th>Post Thermal Aging Section 4.4.1 and Post Humid Heat Cyclic (HHC) Section 4.4.3</th></tr>
<tr><td>0.50 mm</td><td>20 N</td><td>60 N</td><td>50 N</td></tr>
<tr><td>0.64 mm</td><td>30 N</td><td>60 N</td><td>50 N</td></tr>
<tr><td>≤ 1.5 mm</td><td>50 N</td><td>80 N</td><td>70 N</td></tr>
<tr><td>≤ 2.8 mm</td><td>60 N</td><td>100 N</td><td>90 N</td></tr>
<tr><td>≤ 6.3 mm</td><td>90 N</td><td>120 N</td><td>110 N</td></tr>
<tr><td>≤ 9.5 mm</td><td>100 N</td><td>150 N</td><td>140 N</td></tr>
<tr><td>> 9.5 mm</td><td>100 N</td><td>200 N</td><td>190 N</td></tr>
</table>
PLR = Primary Lock Retention</td><td>SAE/USCAR-2</td></tr>
<tr><td>Terminal Cavity Polarization</td><td>Terminals inserted in any incorrect orientation shall not fit or lock into a connector cavity at a force 1.5 times the normal insertion force, 15 N, or the column strength of the largest applicable wire size, whichever is greater
There shall be no visible damage to either the terminal or connector that would prevent subsequent correct insertion and function following any attempt at incorrect insertion per this procedure</td><td>SAE/USCAR-2</td></tr>
<tr><td>Terminal Bend Resistance</td><td>If the terminal bends from its original position during the test, it shall not tear or crack when straightened to its original position

Table 7: Terminal Size and Applied Bending Force
<table>
<tr><th>Terminal Size</th><th>Applied Force</th></tr>
<tr><td>0.5 mm</td><td>3.0 N</td></tr>
<tr><td>0.64 mm to 1.5 mm</td><td>4.0 N</td></tr>
<tr><td>1.5 mm to 2.8 mm</td><td>7.0 N</td></tr>
<tr><td>2.8 mm to 6.3 mm</td><td>10.0 N</td></tr>
<tr><td>6.3 mm to 9.5 mm</td><td>15.0 N</td></tr>
<tr><td>≥ 9.5 mm</td><td>20.0 N</td></tr>
</table></td><td>The terminal shall not tear or crack when subjected to the applied force for 15 seconds
SAE/USCAR-2</td></tr>
<tr><td>Connector-to-Connector Engagement Force</td><td>The maximum force required to fully engage and lock the fully populated male and female connectors shall be <75 N</td><td>USCAR25</td></tr>
</table>

The information contained herein is exclusive property of Attend. Do not copy and print except that Attend accepts. 本文件係屬立威科技股份有限公司所有；非經同意，不得以任何覆寫、拷貝、翻印等方式私自據有。亦不得擅加毀損、塗改。

立威科技股份有限公司 Attend Technology Inc.
新北市汐止區新台五路一段81號10樓之六
10F-6, No.81, Sec.1, Xintai 5th Rd., Xizhi-Dist., New Taipei City 221, Taiwan, R.O.C.
TEL 886 2 2698 7028 FAX 886 2 2698 7078 WEBSITE www.attend.com.tw

<table>
<tr>
<td>Terminal Position Assurance (TPA)</td>
<td>
Table 8: TPA Removal Force Table
<table>
<tr><th>Row</th><th>Procedure</th><th>Unprotected TPA Note 1</th><th>Protected TPA</th></tr>
<tr><td>1</td><td>TPA Removal from Connector Note 2</td><td>20 N minimum</td><td>20 N minimum</td></tr>
<tr><td>2</td><td>Pre-lock to Lock Position
without Terminals</td><td>30 N minimum
45 N maximum</td><td>20 N minimum
45 N maximum</td></tr>
<tr><td>3</td><td>Pre-lock to Lock Position
with Properly Seated Terminals</td><td>30 N minimum
45 N maximum</td><td>20 N minimum
45 N maximum</td></tr>
<tr><td>4</td><td>Pre-lock to Lock Position
with One Incorrectly Seated Terminal Note 2</td><td>60 N or
2 × the measured value of Row 3,
whichever is larger.</td><td>60 N or
2 × the measured value of Row 3,
whichever is larger.</td></tr>
<tr><td>5</td><td>TPA Locked to Pre-locked Position</td><td>25 N minimum
45 N maximum</td><td>20 N minimum
45 N maximum</td></tr>
</table>
</td>
<td>SAE/USCAR-2</td>
</tr>
<tr>
<td>Connector Mounting Feature Mechanical Strength</td>
<td>
The minimum force required to break the mounting feature or separate the clip from the mounting feature in directions F1 to F5 shall be > 50 N.
The minimum force required to break the mounting feature or separate the clip from the mounting feature in direction F6 shall be > 110 N
or separate the clip from the mounting feature in direction F6 shall be > 110 N
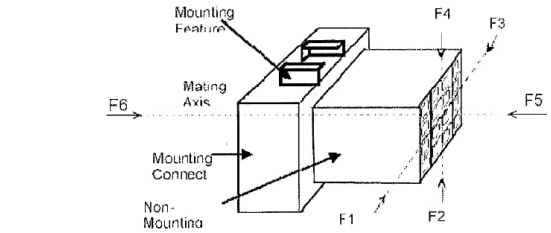

Note: Arrows indicate direction of applied force, not location of probe.
Figure 7: Connector Mounting Fixture Strength Test Setup, 3-Dimensional View
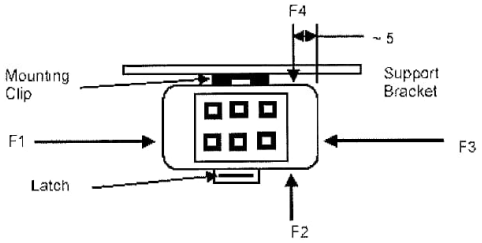

Figure 8: Connector Mounting Fixture Strength Test Setup, End View
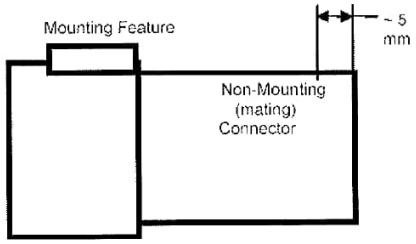

Figure 9: Connector Mounting Fixture Strength Test Setup, Side View
</td>
<td>With the connector assembly attached to the bracket, apply a downward force at a rate of (50 + 10) mm/minute to the non-mounted mating connector in direction F1 until breakage of the mounting feature or until the force specified in the Acceptance Criteria of Section 4.2.12.5 is reached. The force shall be applied 5 mm from the rear and side of the connector to affect the greatest moment arm.</td>
</tr>
</table>

The information contained herein is exclusive property of Attend. Do not copy and print except that Attend accepts. 本文件係屬立威科技股份有限公司所有；非經同意，不得以任何覆寫、拷貝、翻印等方式私自據有。亦不得擅加毀損、塗改。

立威科技股份有限公司 Attend Technology Inc.
新北市汐止區新台五路一段81號10樓之六
10F-6, No.81, Sec.1, Xintai 5th Rd., Xizhi-Dist., New Taipei City 221, Taiwan, R.O.C.
TEL 886 2 2698 7028 FAX 886 2 2698 7078 WEBSITE www.attend.com.tw

Connector Audible Feedback	1. Measure and record the sound pressure level in decibels C-weighted scale (dB (C)), of the ambient sound within the test environment. The ambient noise level shall be 60 dB (C) minimum 2. Locate the sound measuring device or microphone (600 T 50) mm from the connector 3, Mate the connectors by hand and measure the dB (C) level of the sound generated as the lock engages. Do not bias the connectors toward or away from the latch as they are engaged 4. Repeat Steps 1 thru Step 3 using moisture conditioned parts. Parts are brought to their practical limit of moisture content by exposing "dry as molded parts" to 95% to 98% Relative Humidity at 40 °C for 6 hours (minimum), then completing the test within 30 minutes 5. The minimum sound level required shall be as specified on the part drawing. If no value is specified, the requirement is 7 dB above the recorded ambient for un-conditioned parts and 5 dB for conditioned parts	SAE/USCAR-2
Connector Lock Mechanical Overstress	There shall be no damage to the connector lock assembly after the force is applied	Wrap a 0.33 mm* (22 ga) wire around the connector lock assembly. Pull with 150 N on the wire against the lock in both horizontal and vertical directions
Connector Position Assurance	The CPA pre-stage to lock force shall be 22 N maximum. The CPA lock to pre stage force shall be between 10 N and 30 N without the use of special tools CPA Closing Force on Unmated Connectors. The closing force for non-mated connector shall be greater than 80 N, or twice the mating force of the connection, whichever is greater CPA Extraction Force from Connector. The extraction force of the CPA shall be 60 N minimum	SAE/USCAR-2
Connector Seal Retention - Mated Connector	Connector shall be fully separated within 1 second	SAE/USCAR-2

The information contained herein is exclusive property of Attend. Do not copy and print except that Attend accepts. 本文件係屬立威科技股份有限公司所有；非經同意，不得以任何覆寫、拷貝、翻印等方式私自據有。亦不得擅加毀損、塗改。

立威科技股份有限公司 Attend Technology Inc.
新北市汐止區新台五路一段81號10樓之六
10F-6, No.81, Sec.1, Xintai 5th Rd., Xizhi-Dist., New Taipei City 221, Taiwan, R.O.C.
TEL 886 2 2698 7028 FAX 886 2 2698 7078 WEBSITE www.attend.com.tw

<table>
<tr><td>Connector Seal Retention - Unmated Connector</td><td>1. Properly secure the sample under test per Figure 10, and ensure that only the connector seal is free to move.
2. Rotate the table at a speed (measure in rpm) to generate a minimum acceleration of 1960 m/s^2 (=200G), for a minimum of 10 seconds
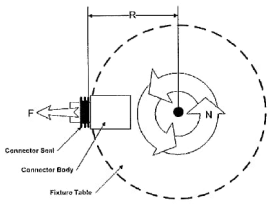

Figure 10: Unmated Connector Seal Test</td><td>SAE/USCAR-2</td></tr>
<tr><td>Locked Connector Disengagement Force</td><td>>80 N
Table 9: Locked Connector Disengage Force
<table>
<tr><th>Terminal Size Note</th><th>Force</th></tr>
<tr><td>0.5 mm to 1.2 mm</td><td>80 N</td></tr>
<tr><td>>1.2 mm</td><td>120 N</td></tr>
</table>
Note: For mixed terminal size connectors, use the row for the largest terminal size.</td><td>SAE/USCAR-2</td></tr>
<tr><td>Unlocked Connector Disengagement Force</td><td>The maximum force required to disengage the primary lock shall be less than 70 N</td><td>SAE/USCAR-2</td></tr>
<tr><td>Connector Polarization (Coding) Feature Effectiveness</td><td>>150N
No physical damage occur</td><td>SAE/USCAR-2</td></tr>
<tr><td>Mechanical Shock</td><td>General Connectors
There shall be no loss of electrical continuity, defined as resistance exceeding 7 Ω for a duration longer than 1 µs
SIR Connectors
Supplemental Inflatable Restraint connectors shall not lose continuity, defined as resistance exceeding 1 Ω for a duration longer than 1 ms</td><td>SAE/USCAR-2</td></tr>
</table>

The information contained herein is exclusive property of Attend. Do not copy and print except that Attend accepts. 本文件係屬立威科技股份有限公司所有；非經同意，不得以任何覆寫、拷貝、翻印等方式私自據有。亦不得擅加毀損、塗改。

立威科技股份有限公司 Attend Technology Inc.
新北市汐止區新台五路一段81號10樓之六
10F-6, No.81, Sec.1, Xintai 5th Rd., Xizhi-Dist., New Taipei City 221, Taiwan, R.O.C.
TEL 886 2 2698 7028 FAX 886 2 2698 7078 WEBSITE www.attend.com.tw

ENVIRONMENTAL		
Item	Requirement	Test Condition
Thermal Aging	All mechanical assists and/or other elements required to separate connectors for service shall function without breakage.	Duration:1008 h SAE/USCAR-2
Thermal Shock	There shall be no loss of electrical continuity during the test	Temperature: -40℃~105℃ Duration: Exposure time at temperature extreme 30 minutes, 100 cycles SAE/USCAR-2
Humid Heat Cyclic(HHC)	Test samples shall meet the dry circuit requirements of Section 4.3.2, Table 11 both before and after the Humid Heat Cyclic (HHC) test All test samples shall meet the visual requirements of Section 3.4.1.6. All mechanical assists and/or other elements required to separate connectors for service shall function without breakage. There shall be no loss of seal integrity for sealed connectors	High Temp (+65 °C): Humidity maintained at (93 ± 3)%. Transition (+65 °C to +25 °C): Humidity drops to 80%. Low Temp (+25 °C): Humidity increases to (93 ± 3)%. Cold Phase (< +25 °C): Humidity is uncontrolled. Duration: 10 days SAE/USCAR-2
Humid Heat Constant (HHCO)	All test samples shall meet the visual requirements of paragraph 3.4.1.7. All mechanical assists and/or other elements required to separate connectors for service shall function without breakage There shall be no loss of seal integrity as applicable for sealed samples	Temperature 85± 3°C Duration: 10 days Humidity: 90 ± 5% SAE/USCAR-2
Heavy Duty Test	Acceptance Criteria. Maximum allowed temperature rise on the terminal at the end of each cycle is 50 °C	SAE/USCAR-2
Flammability	The burn rate of the material test samples shall be less than 100 mm/minute	GMW3232
Corrosion	1. There shall be no deformation, cracks, or breaking evident on the connector body. Any swelling or physical distortion shall not exceed the tolerances specified on the part drawing. 2. There shall not be any corrosion on exposed metallic components of the connection system	Duration: 40 days GMW3172

The information contained herein is exclusive property of Attend. Do not copy and print except that Attend accepts. 本文件係屬立威科技股份有限公司所有；非經同意，不得以任何覆寫、拷貝、翻印等方式私自據有。亦不得擅加毀損、塗改。

立威科技股份有限公司 Attend Technology Inc.
新北市汐止區新台五路一段81號10樓之六
10F-6, No.81, Sec.1, Xintai 5th Rd., Xizhi-Dist., New Taipei City 221, Taiwan, R.O.C.
TEL 886 2 2698 7028 FAX 886 2 2698 7078 WEBSITE www.attend.com.tw

<table>
<tr><td>Vibration with Thermal Cycling</td><td>There shall be no loss of electrical continuity during the test</td><td>SAE/USCAR-2</td></tr>
<tr><td>Water Submersion</td><td>No evidence of water or florescent dye shall be present in the interior of either mated connector</td><td>SAE/USCAR-2</td></tr>
<tr><td>Pressure/Vacuum Leak</td><td>Pressure Integrity: There shall be no loss in applied pressure and no bubbles visible exiting any test sample during positive pressure
Electrical Isolation: After vacuum application, all samples must meet the Isolation Resistance requirements
No physical degradation, cracking, or breaking shall be evident on the connector body</td><td>SAE/USCAR-2</td></tr>
<tr><td>High Pressure Spray</td><td>With the table rotating, spray the connector under test for 30s
<table>
<tr><th>Equipment</th><th>Spray Requirements</th><th>Water Flow</th></tr>
<tr><td>Fan jet nozzle ά=30°+/-10°</td><td>Turntable Speed = 5±1 rpm, Position Angle of (0°, 30°, 60°, 90°) ±5°, Distance of (100 to 150) mm</td><td>14 to 16 L/min</td></tr>
</table>
<table>
<tr><th>Water Pressure</th><th>Water temperature</th><th>Exposure Time</th></tr>
<tr><td>Approx. 8,000 to 10,000 KPa</td><td>80±5 °C</td><td>30sec / position of spray angle</td></tr>
</table>
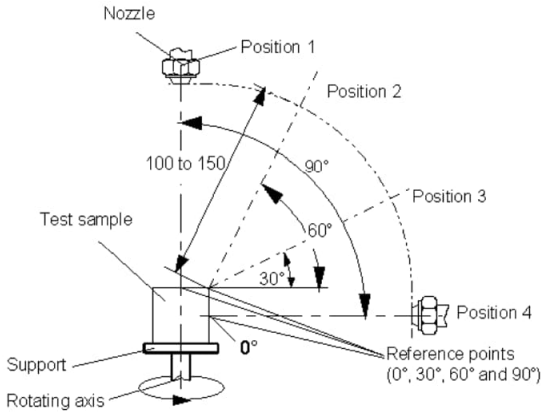

FIGURE 5.6.7.3-1: SPRAY NOZZLE AND TABLE ARRANGEMENT</td><td>SAE/USCAR-2</td></tr>
</table>

The information contained herein is exclusive property of Attend. Do not copy and print except that Attend accepts. 本文件係屬立威科技股份有限公司所有；非經同意，不得以任何覆寫、拷貝、翻印等方式私自據有。亦不得擅加毀損、塗改。

立威科技股份有限公司 Attend Technology Inc.
新北市汐止區新台五路一段81號10樓之六
10F-6, No.81, Sec.1, Xintai 5th Rd., Xizhi-Dist., New Taipei City 221, Taiwan, R.O.C.
TEL 886 2 2698 7028 FAX 886 2 2698 7078 WEBSITE www.attend.com.tw

<table>
<tr>
<td>Fluid Resistance</td>
<td>There shall be no visible degradation, swelling, cracking, or loss of mechanical function evident on any test sample when examined under 10 to 40 X magnification.
Note: Swelling of cable and cable seals is permissible if the function is not affected. Connectors shall pass all sealing performance requirements.

Table 24: Fluids
<table>
<tr><th>Fluid</th><th>Specification Number</th><th>Temperature</th></tr>
<tr><td>Brake Fluid</td><td>L 000 0102 or SAE RM66-04</td><td>50 °C</td></tr>
<tr><td>Oil</td><td>B 040 0900 or ASTM IRM-902</td><td>85 °C</td></tr>
<tr><td>Gasoline</td><td>GMW14914 or ASTM Reference Fuel C</td><td>25 °C</td></tr>
<tr><td>Engine Coolant</td><td>B 040 1065 or ASTM Service Fluid 104</td><td>100 °C</td></tr>
<tr><td>Automatic Transmission Fluid</td><td>B 040 1073 or Citgo #33123</td><td>85 °C</td></tr>
<tr><td>Windshield Washer Solvent</td><td>Commercial</td><td>25 °C</td></tr>
<tr><td>Power Steering Fluid</td><td>B 040 2012 or ASTM IRM-903</td><td>50 °C</td></tr>
<tr><td>Diesel Fluid</td><td>EN 590 or 90% ASTM IRM 903 + 10% T-Xylene</td><td>25 °C</td></tr>
<tr><td>E85 Ethanol Fuel</td><td>85% Ethanol + 15% GMW14914 or
85% Ethanol + 15% ASTM Reference Fuel C</td><td>25 °C</td></tr>
</table>
Note: Depending on the specific application, additional fluids may be required. Refer to GMW 3172.</td>
<td>SAE/USCAR-2</td>
</tr>
</table>

The information contained herein is exclusive property of Attend. Do not copy and print except that Attend accepts. 本文件係屬立威科技股份有限公司所有；非經同意，不得以任何覆寫、拷貝、翻印等方式私自據有。亦不得擅加毀損、塗改。