REV.	DESCRIPTION	DRAWN	DATE
1	INITIAL RELEASE	FROS	2025/08/07

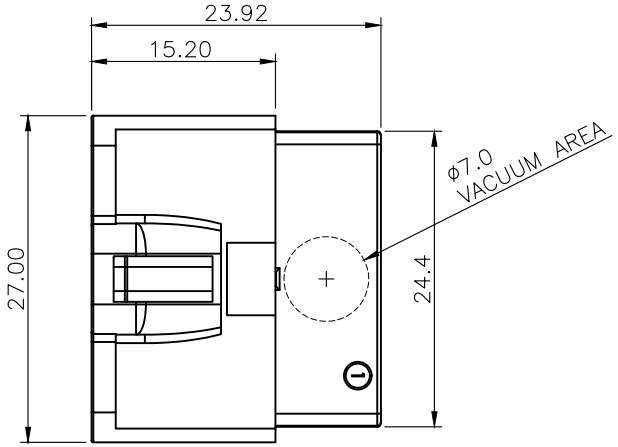

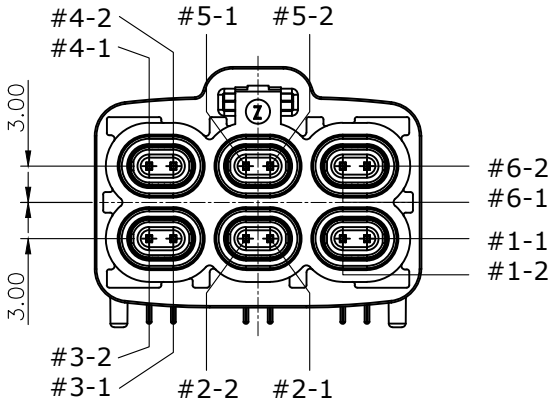

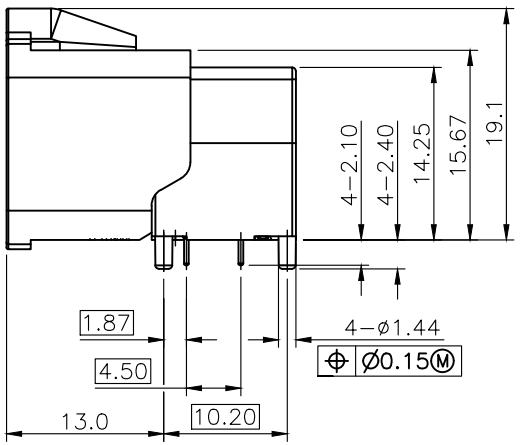

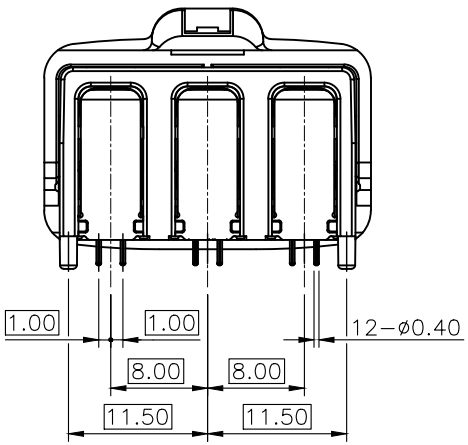

SPECIFICATION:

1. ELECTRICAL
1.1 Current Rating: 1.5A per pin
1.2 Voltage Rating: 60V AC/DC
1.3 Contact Resistance: 10mΩ
1.4 Insulation Resistance: 100MΩ
1.5 Dielectric Withstanding Voltage: 250VAC
1.6 Impedance: 100Ω
1.7 Frequency: 10 GHz

2. MECHANICAL
2.1 Durability: 25 Cycle

3. ENVIRONMENTAL
3.1 Operating temperature range: -40°C~+105°C
3.2 Storage temperature range: -40°C~+105°C

4. SOLDER ABILITY
4.1 Recommended Reflow Soldering Temperature (Pin-in-Paste): Peak 260°C max.

How to order

232D- P 0 Z 00

- Z: Z Code
- 0: Right angle 12 o'clock
- P: Plug

NO.	PART NAME	DESCRIPTION
5	GROUND PIN	Copper alloy, tin plating over nickel
4	OUTER-CNT	Zinc alloy, tin plating over nickel
3	CONTACT	Copper alloy, 6u" gold on contact area, tin plating on solder tails, under plating nickel over all
2	INNER-HSG	Thermoplastic, black
1	HOUSING	PA, UL94V-0, Black

UNLESS OTHERWISE SPECIFIED TOLERANCE

UNIT:	DECIMAL	LINEAR	ANGLES
mm	X.	±0.50	±5°
	X.X	±0.25	±3°
	X.XX	±0.12	±1°

ATTEND

www.attend.com.tw

DRAWN	Fros	2025/08/07	DRAWN NAME: HS-MTP Plug, 2x3 Port, Right Angle
CHECKED	Tim	2025/08/07	
APPROVED	Ken	2025/08/07	PRODUCT NO. 232D-P0X00
SCALE 1.6/1	SHEET 1/3	SIZE A4	FILE NAME 232D-P0X00_B_1

REV.	DESCRIPTION	DRAWN	DATE

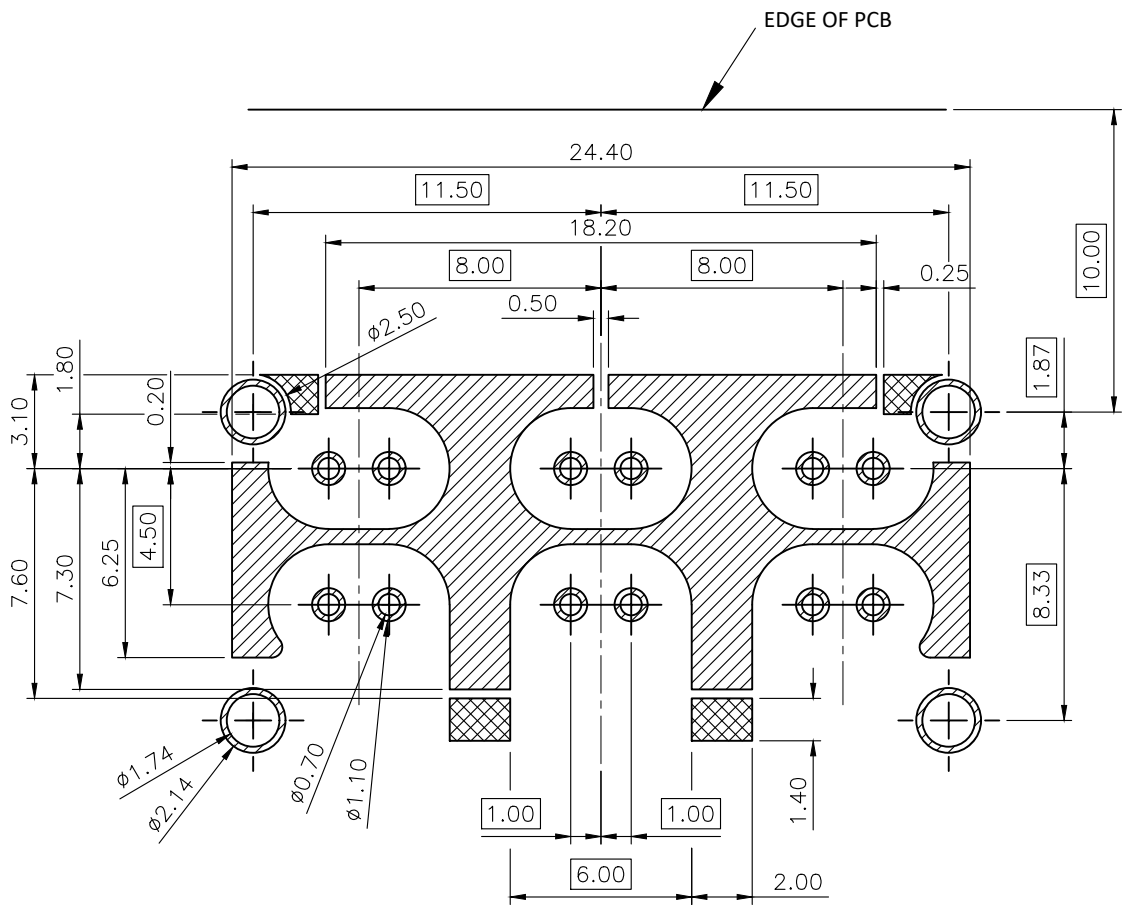

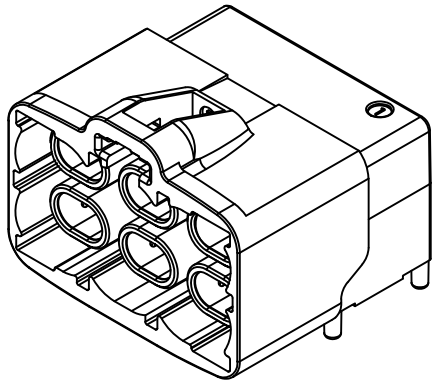

Solder area

Keep out area, free of solder

UNLESS OTHERWISE SPECIFIED TOLERANCE				
UNIT: mm	DECIMAL	LINEAR	ANGLES	ATTEND
	X.	±0.50	±5°	
	X.X	±0.25	±3°	
	X.XX	±0.12	±1°	www.attend.com.tw
DRAWN	Fros	2025/08/07	DRAWN NAME: HS-MTP Plug, 2x3 Port, Right Angle	
CHECKED	Tim	2025/08/07		
APPROVED	Ken	2025/08/07	PRODUCT NO.	232D-P0X00
	SCALE 4/1	SHEET 2/3	SIZE A4	FILE NAME 232D-P0X00_B_1

REV.	DESCRIPTION	DRAWN	DATE

CODING	A	B	C	D	E	F	G
	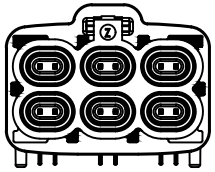	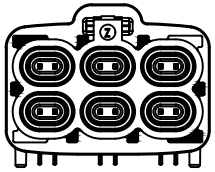	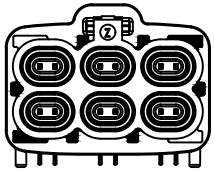	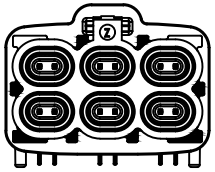	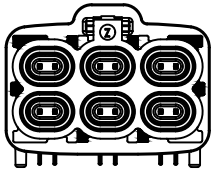	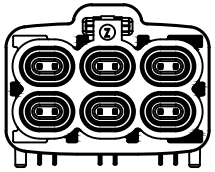	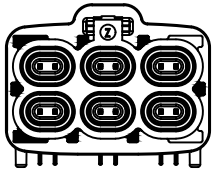
CODING	H	J	K	L	M	O	Z
	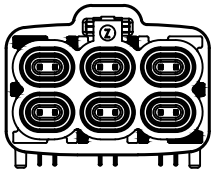	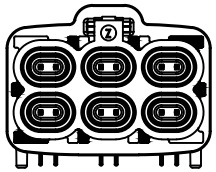	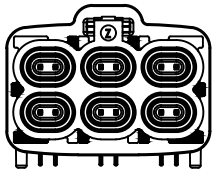	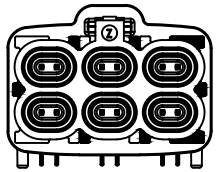	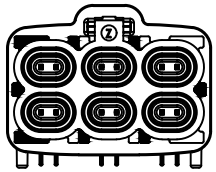	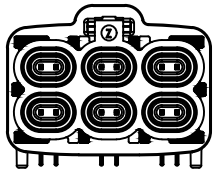	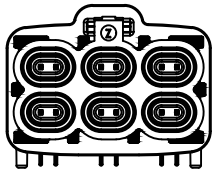

UNLESS OTHERWISE SPECIFIED TOLERANCE				
UNIT:	DECIMAL	LINEAR	ANGLES	ATTEND
mm	X.	±0.50	±5°	
	X.X	±0.25	±3°	
	X.XX	±0.12	±1°	www.attend.com.tw
DRAWN	Fros	2025/08/07	DRAWN NAME: HS-MTP Plug, 2x3 Port, Right Angle	
CHECKED	Tim	2025/08/07		
APPROVED	Ken	2025/08/07	PRODUCT NO.	232D-P0X00
	SCALE N/A	SHEET 3/3	SIZE A4	FILE NAME 232D-P0X00_B_1

REV.	DESCRIPTION	DRAWN	DATE
1	INITIAL RELEASE	FROS	2025/08/07

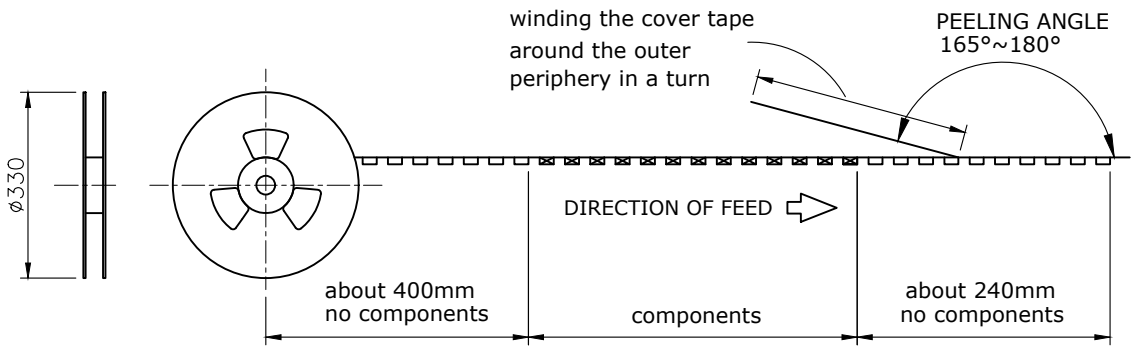

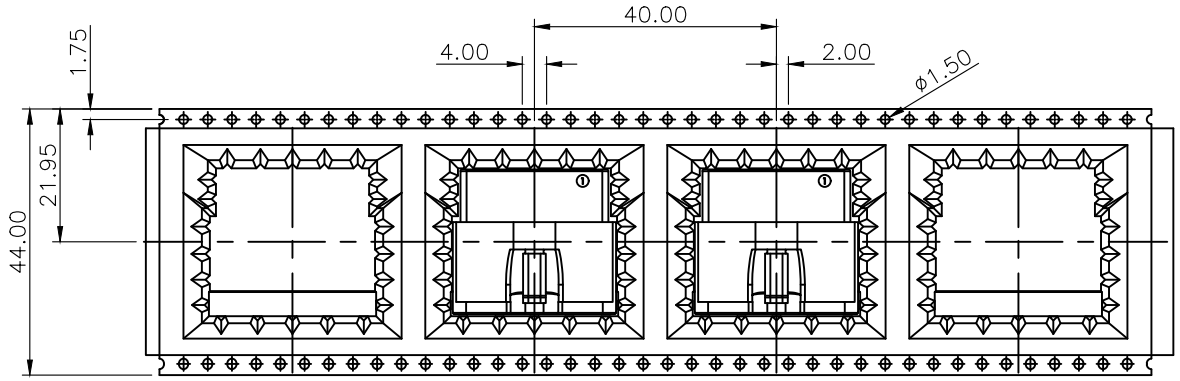

PACKAGING SPECIFICATION:

1. MATERIAL
1.1 Embossed Carrier Tape: PS Black
1.2 Top Cover Tape: PET
20-80g(Peel Speed 300mm/Minute)
1.3 Taping Reel: Plastic

2. PACKING
2.1 Quantity:
65 Piece/Reel
390 Piece/Outer Carton

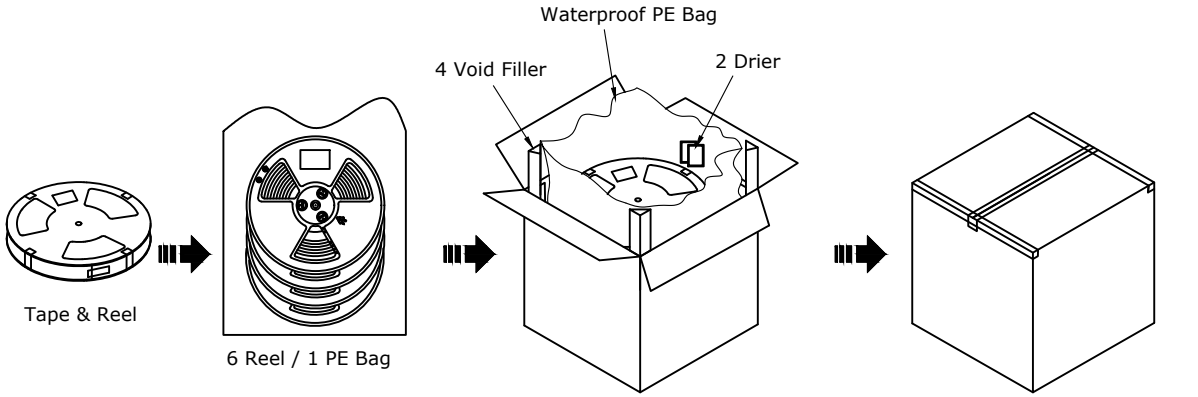

UNLESS OTHERWISE SPECIFIED TOLERANCE				
UNIT:	DECIMAL	LINEAR	ANGLES	ATTEND
mm	X.	±0.50	±5°	
	X.X	±0.25	±3°	
	X.XX	±0.12	±1°	www.attend.com.tw

DRAWN	Fros	2025/08/07	DRAWN NAME: HS-MTP Plug, 2x3 Port, Right Angle	
CHECKED	Tim	2025/08/07		
APPROVED	Ken	2025/08/07	PRODUCT NO.	232D-P0X00
SCALE N/A	SHEET 1/1	SIZE A4	FILE NAME	232D-P0X00_B_1