REV.	DESCRIPTION	DRAWN	DATE
1	INITIAL RELEASE	FROS	2025/08/08

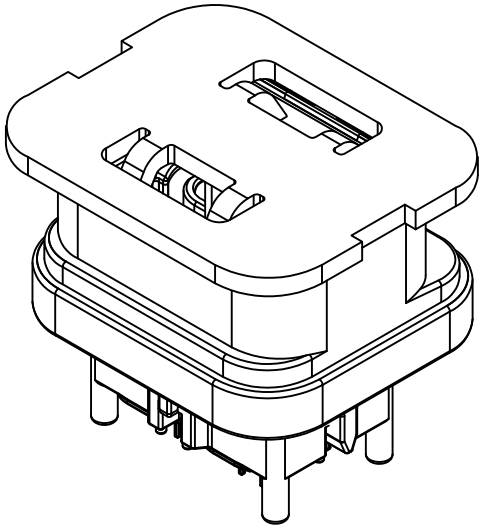

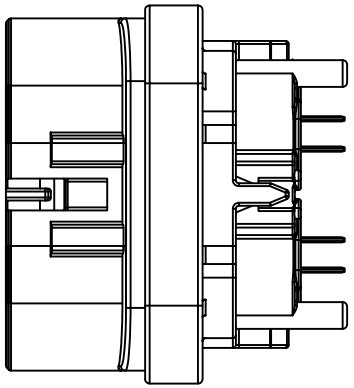

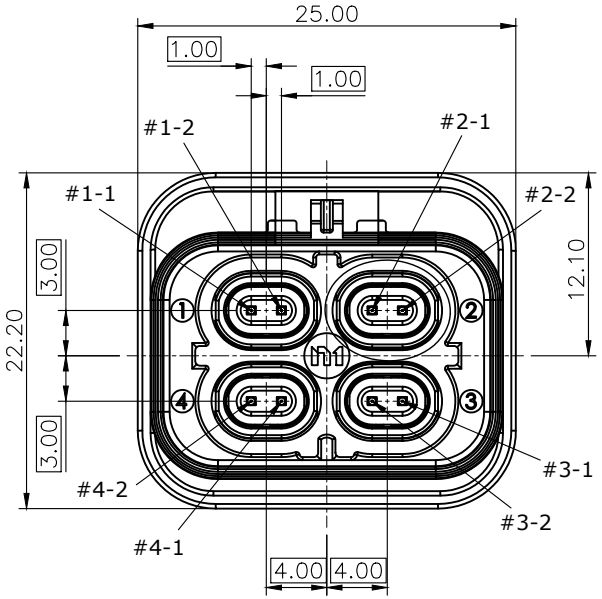

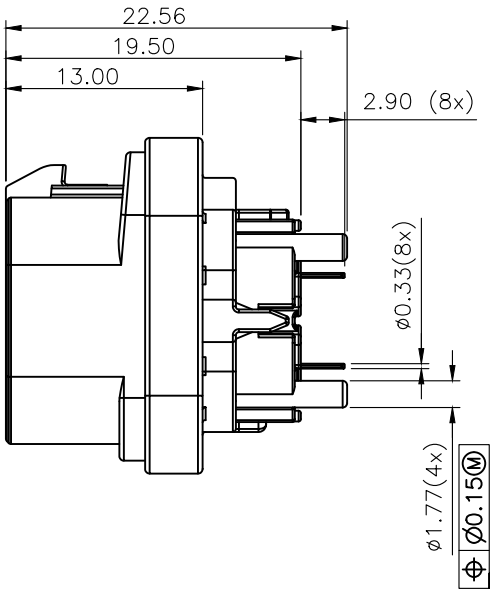

SPECIFICATION:

1. ELECTRICAL
1.1 Current Rating: 1.5A per pin
1.2 Voltage Rating: 60V DC
1.3 Contact Resistance: 10mΩ
1.4 Insulation Resistance: 100MΩ
1.5 Dielectric Withstanding Voltage: 250VAC
1.6 Impedance: 100Ω
1.7 Frequency: DC 20GHz

2. MECHANICAL
2.1 Durability: 25 Cycle

3. ENVIRONMENTAL
3.1 Operating temperature range: -40°C~+105°C
3.2 Storage temperature range: -40°C~+105°C

4. SOLDER ABILITY
4.1 Recommended Reflow Soldering Temperature (Pin-in-Paste): Peak 260°C max.

How to order

232C- P S Z 00

- Z: Z Code
- S: Straignt
- P: Plug

NO.	PART NAME	DESCRIPTION
5	GROUND PIN	Copper alloy, tin plating over nickel
4	OUTER CNT	Zinc alloy, tin plating over nickel
3	CONTACT	Copper alloy, contact area 6u" gold, solder area tin plating, under plating nickel
2	INNER HSG	Thermoplastic, black
1	HOUSING	PA

UNLESS OTHERWISE SPECIFIED TOLERANCE

UNIT:	DECIMAL	LINEAR	ANGLES
mm	X.	±0.50	±5°
	X.X	±0.25	±3°
	X.XX	±0.12	±1°

ATTEND

www.attend.com.tw

DRAWN	Fros	2025/08/08	DRAWN NAME: HS-MTP Plug, 2x2 Port, Straight Type, IP67 (when mated)
CHECKED	Tim	2025/08/08	
APPROVED	Ken	2025/08/08	PRODUCT NO. 232C-PSX00
SCALE 2/1	SHEET 1/3	SIZE A4	FILE NAME 232C-PSX00_B_1

REV.	DESCRIPTION	DRAWN	DATE

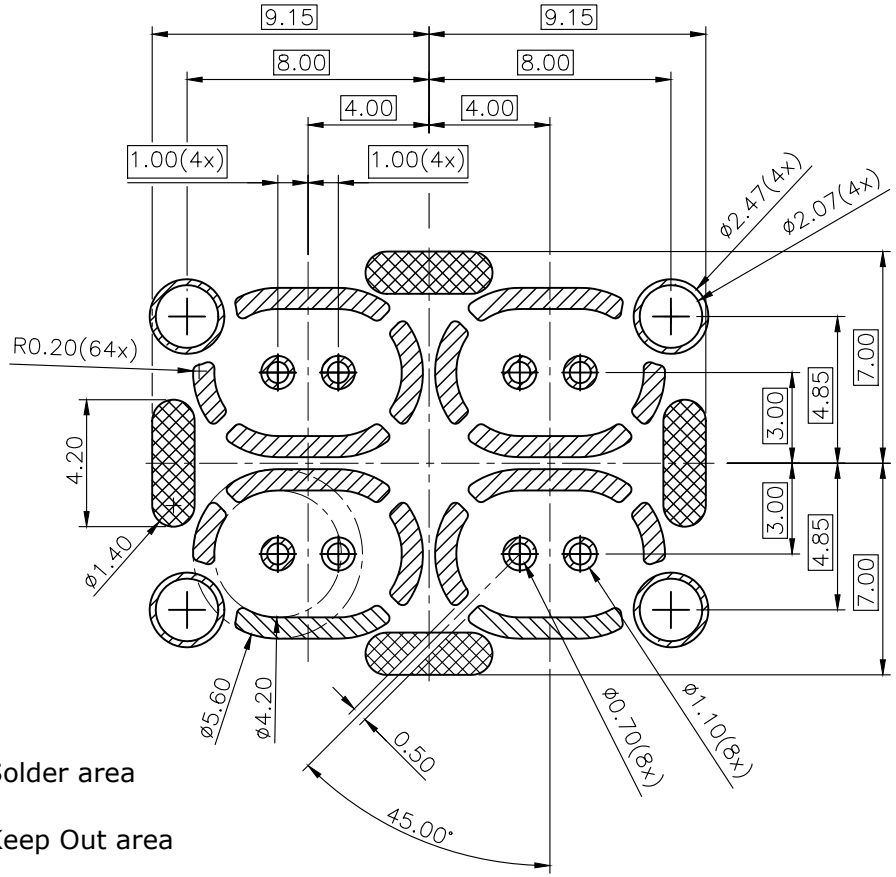

Solder area

Keep Out area

Recommeded Layout (top view)
General Tolerance: ±0.05mm

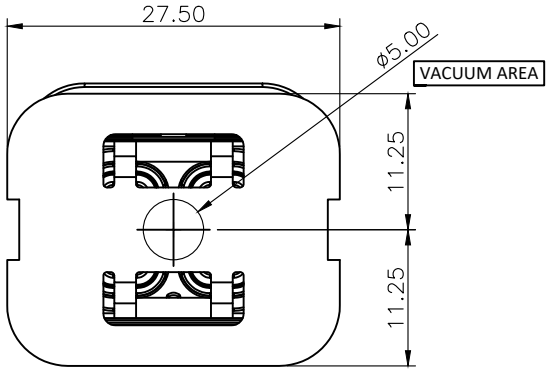

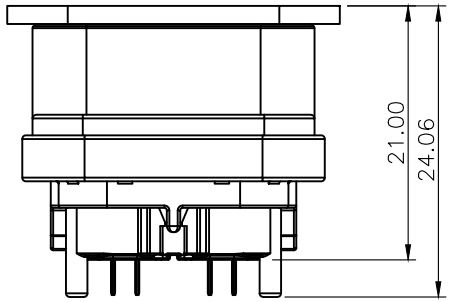

with CAP
scale 1.6/1

UNLESS OTHERWISE SPECIFIED TOLERANCE				
UNIT:	DECIMAL	LINEAR	ANGLES	ATTEND
mm	X.	±0.50	±5°	
	X.X	±0.25	±3°	
	X.XX	±0.12	±1°	www.attend.com.tw

DRAWN	Fros	2025/08/08	DRAWN NAME: HS-MTP Plug, 2x2 Port, Straight Type, IP67 (when mated)	
CHECKED	Tim	2025/08/08		
APPROVED	Ken	2025/08/08	PRODUCT NO.	232C-PSX00
SCALE 4/1	SHEET 2/3	SIZE A4	FILE NAME	232C-PSX00_B_1

REV.	DESCRIPTION	DRAWN	DATE

CODING	A	B	C	D	E	F	G	H
PLUG	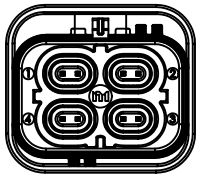		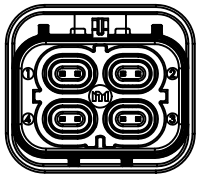			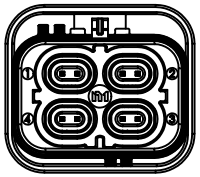		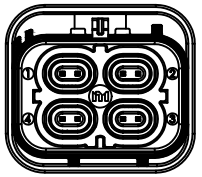
COLOR	JET BLACK	PURE WHITE	LIGHT BLUE	CLARET VIOLET	MAY GREEN	NUT BROWN	PLATINUM GREY	LGHT PINK
RAL	SIM.9005	SIM.9010	SIM.5012	SIM.4004	SIM.6017	SIM.8011	SIM.7036	SIM.3015
CODING	J	K	L	M	N	P	R	Z
PLUG	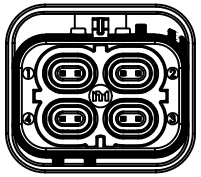	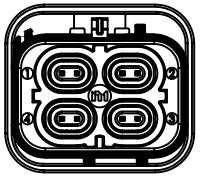		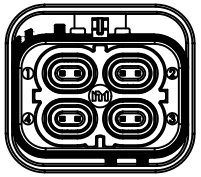	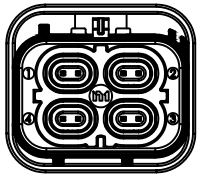	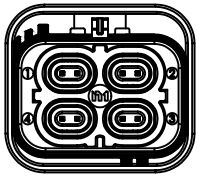	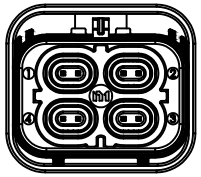	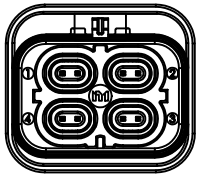
COLOR	BEIGE	CURRY	YELLOW GREEN	PASTEL ORANGE	PASTEL GREEN	CARMINE RED	SINGLE BLUE	WATER BLUE
RAL	SIM.1001	SIM.1027	SIM.6018	SIM.2003	SIM.6019	SIM.3002	SIM.5005	SIM.5021

UNLESS OTHERWISE SPECIFIED TOLERANCE				
UNIT:	DECIMAL	LINEAR	ANGLES	ATTEND
mm	X.	±0.50	±5°	
	X.X	±0.25	±3°	
	X.XX	±0.12	±1°	www.attend.com.tw
DRAWN	Fros	2025/08/08	DRAWN NAME: HS-MTP Plug, 2x2 Port, Straight Type, IP67 (when mated)	
CHECKED	Tim	2025/08/08		
APPROVED	Ken	2025/08/08	PRODUCT NO.	232C-PSX00
SCALE N/A	SHEET 3/3	SIZE A4	FILE NAME	232C-PSX00_B_1

REV.	DESCRIPTION	DRAWN	DATE
1	INITIAL RELEASE	FROS	2025/08/08

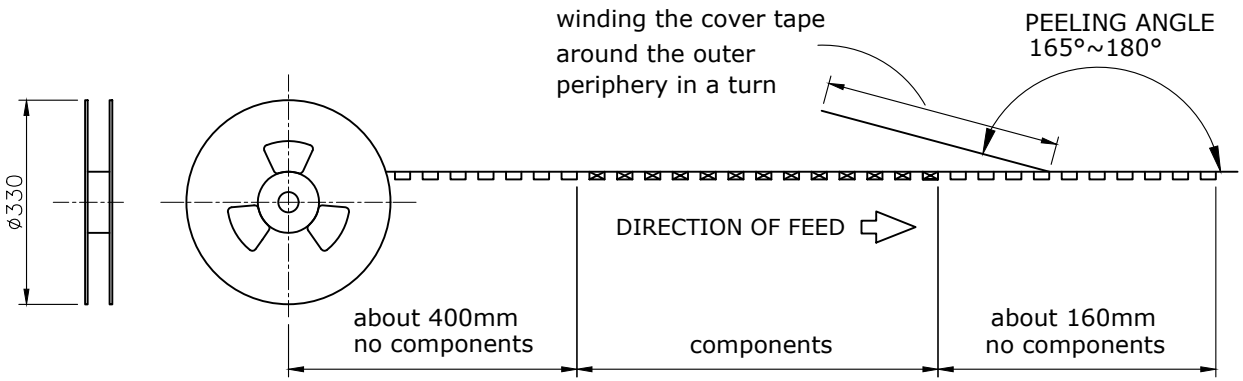

PACKAGING SPECIFICATION:

1. MATERIAL
1.1 Embossed Carrier Tape: PS Black
1.2 Top Cover Tape: PET
20-80g(Peel Speed 300mm/Minute)
1.3 Taping Reel: Plastic

2. PACKING
2.1 Quantity:
40 Piece/Reel
200 Piece/Outer Carton

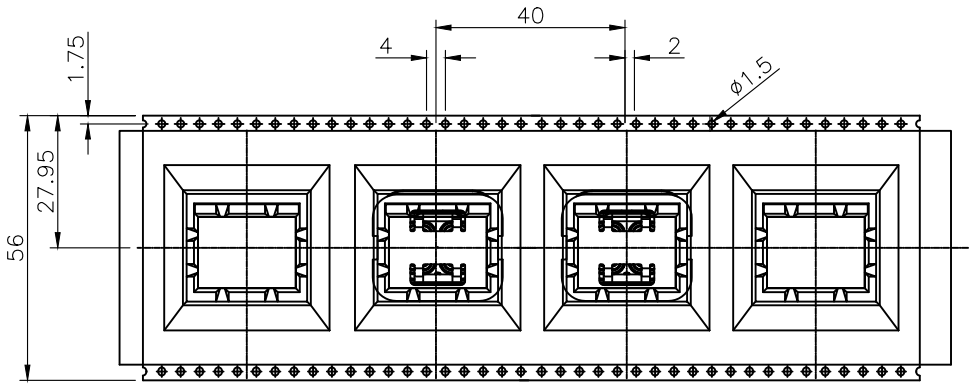

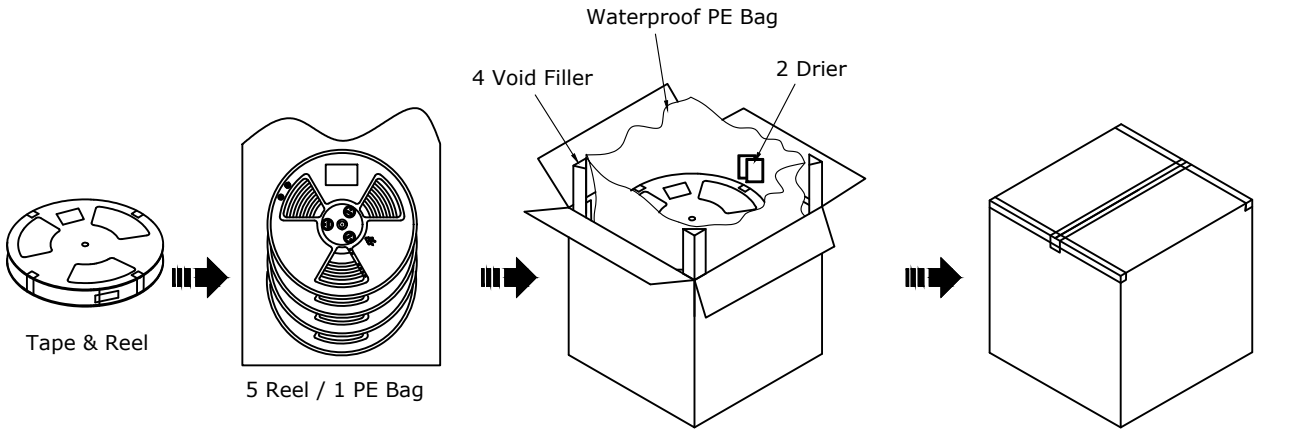

UNLESS OTHERWISE SPECIFIED TOLERANCE				
UNIT:	DECIMAL	LINEAR	ANGLES	ATTEND
mm	X.	±0.50	±5°	
	X.X	±0.25	±3°	
	X.XX	±0.12	±1°	www.attend.com.tw

DRAWN	Fros	2025/08/08	DRAWN NAME: HS-MTP Plug, 2x2 Port, Straight Type, IP67 (when mated)	
CHECKED	Tim	2025/08/08		
APPROVED	Ken	2025/08/08	PRODUCT NO.	232C-PSX00
SCALE N/A	SHEET 1/1	SIZE A4	FILE NAME	232C-PSX00_D_1