REV.	DESCRIPTION	DRAWN	DATE
1	INITIAL RELEASE	FROS	2025/08/13

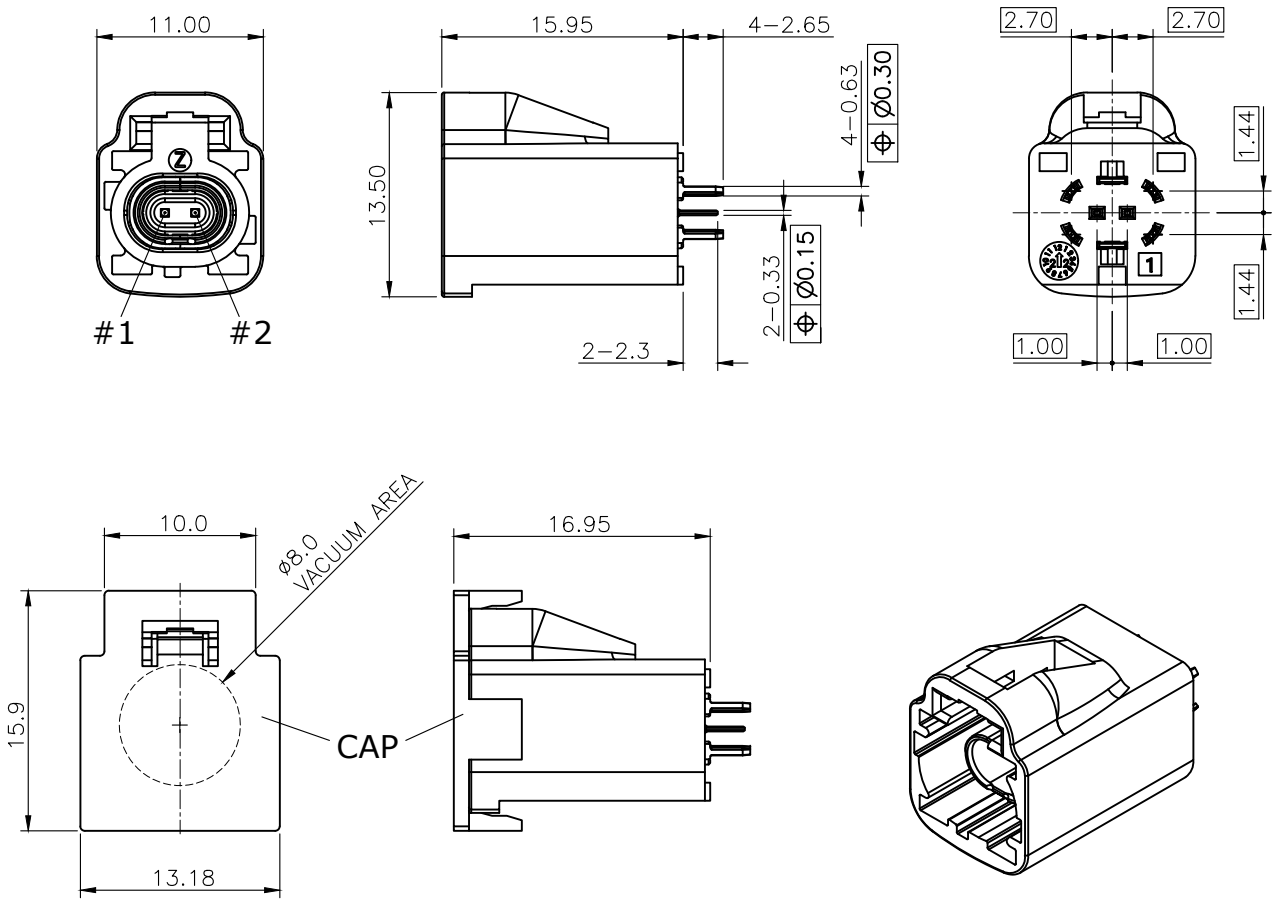

SPECIFICATION:

1. ELECTRICAL
1.1 Current Rating: 1.5A per pin
1.2 Voltage Rating: AC 335Vrms
1.3 Contact Resistance: 10mΩ
1.4 Insulation Resistance: 100MΩ
1.5 Dielectric Withstanding Voltage: 500VAC
1.6 Impedance: 100Ω
1.7 Frequency: 10 GHz

2. MECHANICAL
2.1 Durability: 25 Cycle

3. ENVIRONMENTAL
3.1 Operating temperature range: -40°C~+105°C
3.2 Storage temperature range: -40°C~+105°C

4. SOLDER ABILITY
4.1 Recommended Reflow Soldering Temperature (Pin-in-Paste): Peak 260°C max.

NO.	PART NAME	DESCRIPTION
3	SHELL	Copper alloy, matte tin plating over nickel
2	CONTACT	Copper alloy, 6u" gold plating on contact area, tin plating on solder tails, under plating nickel over all
1	HOUSING	PA

UNLESS OTHERWISE SPECIFIED TOLERANCE

UNIT:	DECIMAL	LINEAR	ANGLES
mm	X.	±0.50	±5°
	X.X	±0.25	±3°
	X.XX	±0.12	±1°

ATTEND
www.attend.com.tw

DRAWN	Fros	2025/08/13	DRAWN NAME: HS-MTP Plug, Straight
CHECKED	Tim	2025/08/13	
APPROVED	Ken	2025/08/13	PRODUCT NO. 232A-PSX00
SCALE 2/1	SHEET 1/3	SIZE A4	FILE NAME 232A-PSX00_B_1

REV.	DESCRIPTION	DRAWN	DATE

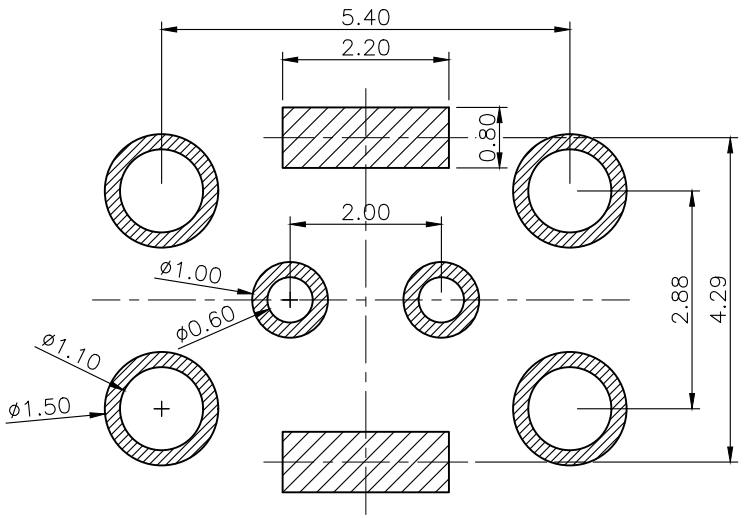

Solder area

Recommended Layout (top view)
General Tolerance: ±0.05mm

UNLESS OTHERWISE SPECIFIED TOLERANCE			
UNIT:	DECIMAL	LINEAR	ANGLES
mm	X.	±0.50	±5°
	X.X	±0.25	±3°
	X.XX	±0.12	±1°

ATTEND
www.attend.com.tw

DRAWN	Fros	2025/08/13	DRAWN NAME: HS-MTP Plug, Straight
CHECKED	Tim	2025/08/13	
APPROVED	Ken	2025/08/13	PRODUCT NO. 232A-PSX00
SCALE 10/1	SHEET 2/3	SIZE A4	FILE NAME 232A-PSX00_B_1

REV.	DESCRIPTION	DRAWN	DATE

A	B	C	D	E	F	G
JET BLACK SIMILAR RAL 9005	PURE WHITE SIMILAR RAL 9010	LIGHT BLUE SIMILAR RAL 5012	CLARET VIOLET SIMILAR RAL 4004	MAY GREEN SIMILAR RAL 6017	NUT BROWN SIMILAR RAL 8011	PLATINUM GREY SIMILAR RAL 7036
H	J	K	L	M	O	Z
LIGHT PINK SIMILAR RAL 3015	BEIGE SIMILAR RAL 1001	CURRY SIMILAR RAL 1027	YELLOW GREEN SIMILAR RAL 6018	PASTEL ORANGE SIMILAR RAL 2003	LIGHT GREEN SIMILAR RAL 6027	WATER BLUE SIMILAR RAL 5021

UNLESS OTHERWISE SPECIFIED TOLERANCE				
UNIT:	DECIMAL	LINEAR	ANGLES	ATTEND
mm	X.	±0.50	±5°	
	X.X	±0.25	±3°	
	X.XX	±0.12	±1°	www.attend.com.tw
DRAWN	Fros	2025/08/13	DRAWN NAME: HS-MTP Plug, Straight	
CHECKED	Tim	2025/08/13		
APPROVED	Ken	2025/08/13	PRODUCT NO.	232A-PSX00
	SCALE N/A	SHEET 3/3	SIZE A4	FILE NAME 232A-PSX00_B_1

REV.	DESCRIPTION	DRAWN	DATE
1	INITIAL RELEASE	FROS	2025/08/13

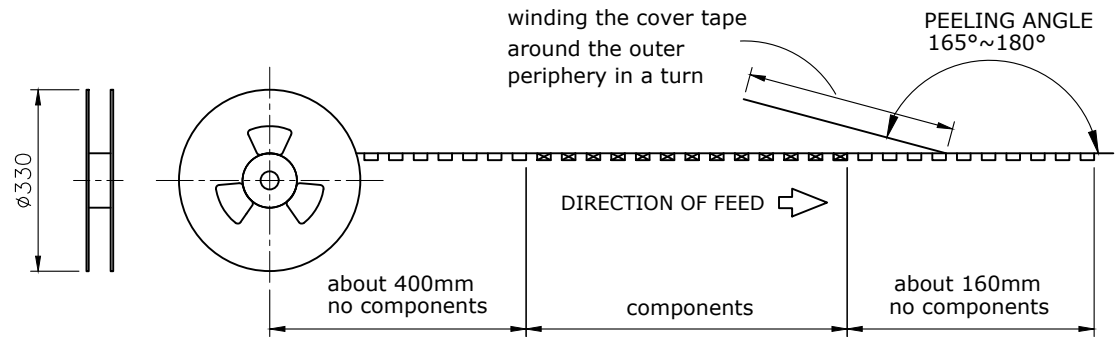

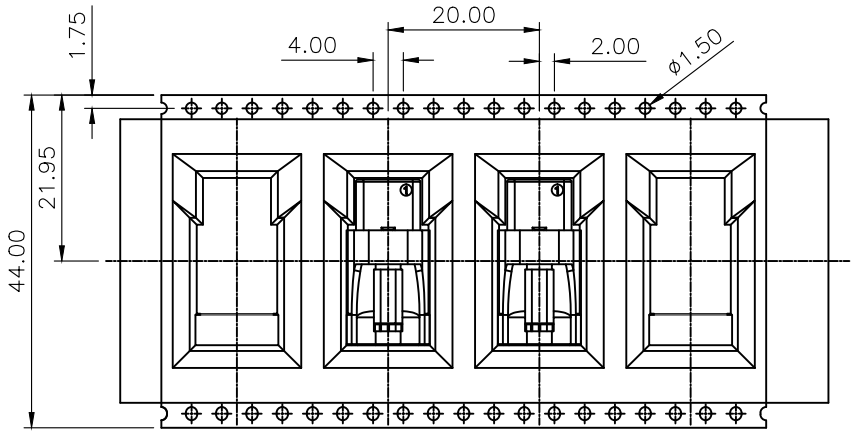

PACKAGING SPECIFICATION:

1. MATERIAL
1.1 Embossed Carrier Tape: PS Black
1.2 Top Cover Tape: PET
20-80g(Peel Speed 300mm/Minute)
1.3 Taping Reel: Plastic

2. PACKING
2.1 Quantity:
180 Piece/Reel
6 Reel/Carton
1080 Piece/Carton

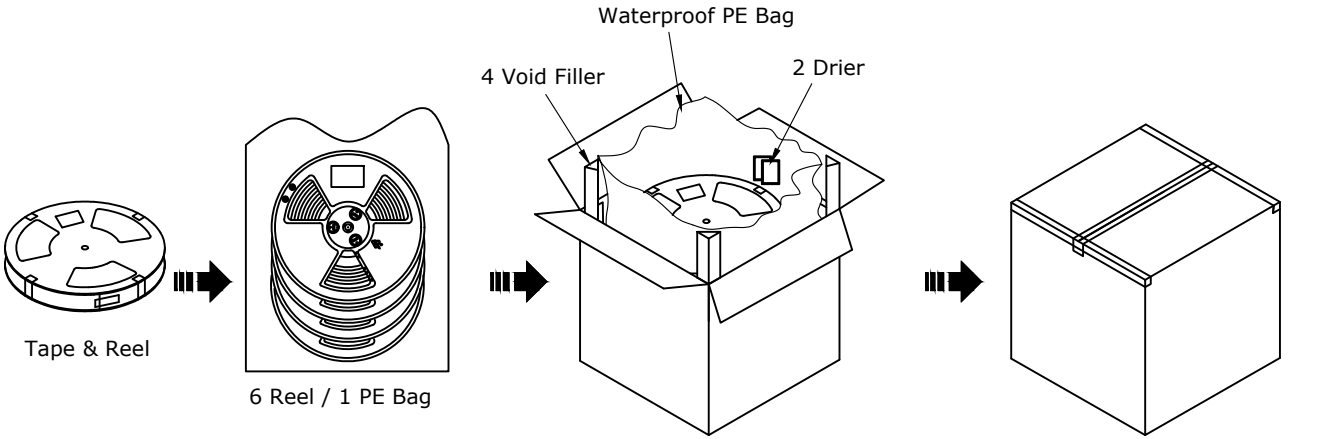

UNLESS OTHERWISE SPECIFIED TOLERANCE				
UNIT:	DECIMAL	LINEAR	ANGLES	ATTEND
mm	X.	±0.50	±5°	
	X.X	±0.25	±3°	
	X.XX	±0.12	±1°	www.attend.com.tw
DRAWN	Fros	2025/08/13	DRAWN NAME: HS-MTP Plug, Straight	
CHECKED	Tim	2025/08/13		
APPROVED	Ken	2025/08/13	PRODUCT NO.	232A-PSX00
SCALE N/A	SHEET 1/1	SIZE A4	FILE NAME	232A-PSX00_D_1