REV.	DESCRIPTION	DRAWN	DATE
1	INITIAL RELEASE	FROS	2026/09/15

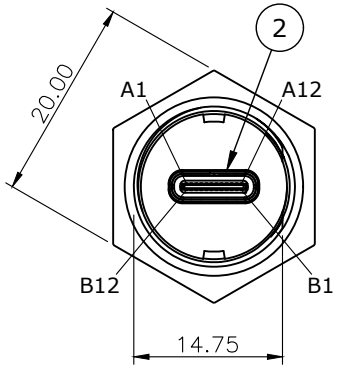

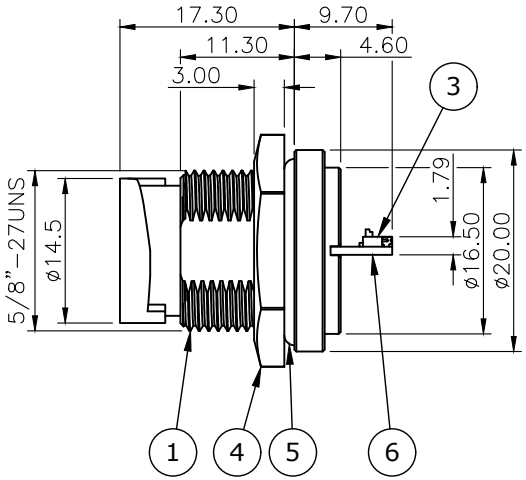

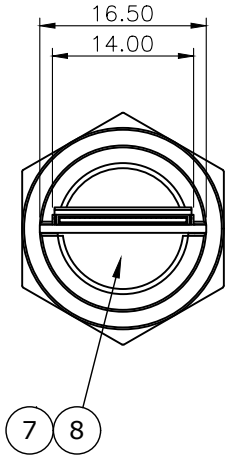

SPECIFICATION:

1. ELECTRICAL
1.1 Current Rating: 3A Max. for Vbus and GND, 1A for other.
1.2 Voltage Rating: 20VDC
1.3 Contact Resistance: 80mΩ
1.4 Insulation Resistance: 100MΩ
1.5 Dielectric Withstanding Voltage: 100VAC

2. MECHANICAL
2.1 Durability: 3,500 Cycle
2.2 Mating Force: 5 to 20N
2.3 Un-mating Force: 6 to 20N

3. ENVIRONMENTAL
3.1 Operating temperature range: -40°C~+85°C
3.2 Storage temperature range: -40°C~+85°C
3.3 Waterproof: IP68

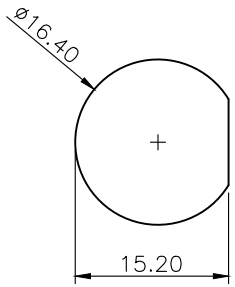

Recommended Panel Cut

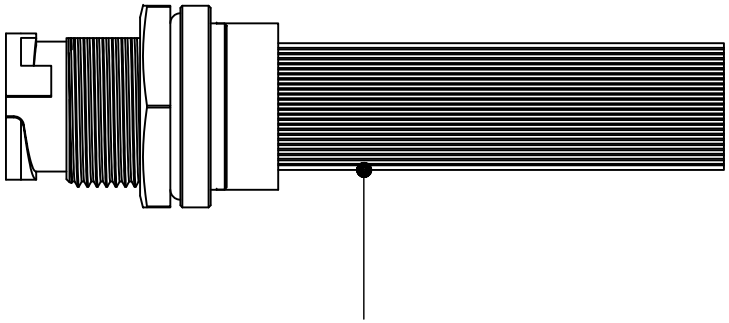

FFC CABLE (Not included)
Please place a separate order for P/N: FFC-0524-15001

Pin Out:

A1	A2	A3	A4	A5	A6	A7	A8	A9	A10	A11	A12
GND	TX1+	TX1-	VBUS	CC1	D+	D-	SBU1	VBUS	RX2-	RX2+	GND

GND	RX1+	RX2-	VBUS	SBU2	D-	D+	CC2	VBUS	TX2-	TX2+	GND
B12	B11	B10	B9	B8	B7	B6	B5	B4	B3	B2	B1

NO.	PART NAME	DESCRIPTION
8	GLUE	EPORITE 5350A/B
7	HOLD	EPDM
6	PCB	FR-4
5	ORING	Silicone
4	NUT	Brass, Nickel Plating
3	FPC CONN.	2x12 Pin
2	USB CONN.	USB 3.2 Gen 2 Type C Receptacle
1	HOUSING	Zn Alloy, Nickel Plating

UNLESS OTHERWISE SPECIFIED TOLERANCE

UNIT:	DECIMAL	LINEAR	ANGLES
mm	X.	±0.50	±5°
	X.X	±0.25	±3°
	X.XX	±0.12	±1°

ATTEND
www.attend.com.tw

DRAWN	Fros	2026/09/15	DRAWN NAME: USB 3.2 Gen 2 Type C Receptacle, Quick-Lock, Panel Mount to FPC, IP68
CHECKED	Tim	2026/09/15	
APPROVED	Ken	2026/09/15	PRODUCT NO. 222A-04005
SCALE 4/3	SHEET 1/1	SIZE A4	FILE NAME 222A-04005_B_1