REV.	DESCRIPTION	DRAWN	DATE
1	INITIAL RELEASE	FROS	2026/05/20

NOTES:

1. All cable 100% testing, any open, mis-wiring, short & intermittent are not permitted
2. RoHS compliance
3. Waterproof IP68
4. Torque 2~4kgf-cm/ 0.2~0.4N-M

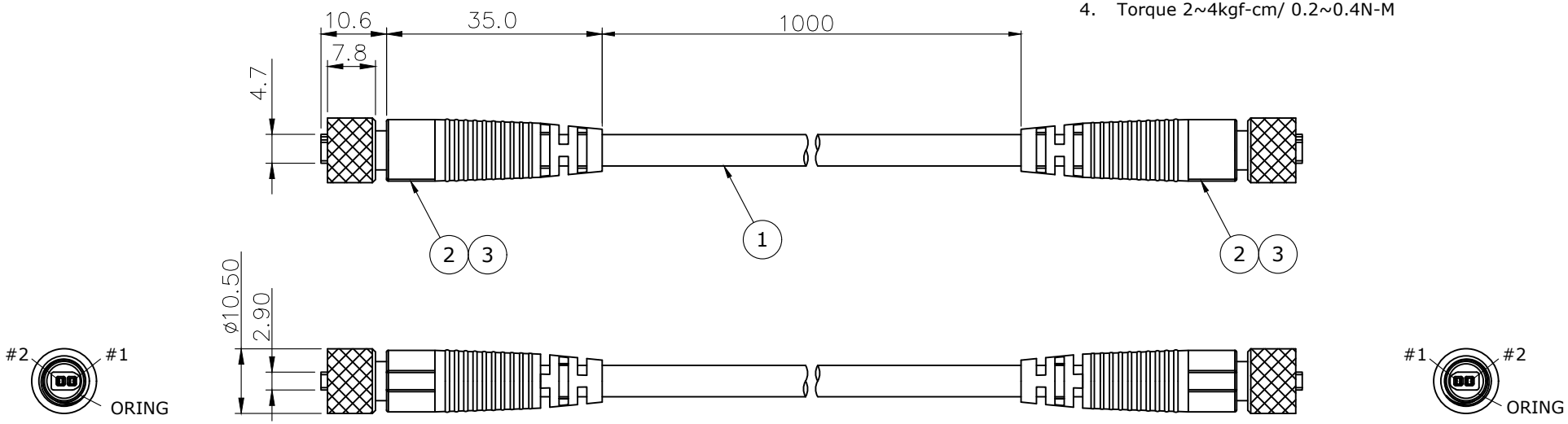

NO.	Q'ty	DESCRIPTION
3	2PC	Over molding, TPU black
2	2PC	SPE connector, G/F, copper shell and nut, EPDM oring
1	1PC	SFTP 22AWG x 1 pair, OD 5.0mm

UNLESS OTHERWISE SPECIFIED TOLERANCE

UNIT: mm	1~10 ±1 11~30 ±2 31~50 ±3 51~200 ±5	>401 ±10 ANGLE ±5°

ATTEND

www.attend.com.tw

DRAWN	Fros	2026/05/20	DRAWN NAME: M8 SPE 2PIN Female to Female Cable, 1M
CHECKED	Allen	2026/05/20	
APPROVED	Ken	2026/05/20	CUSTOMER NO.
SCALE 1/1	SHEET 1/1	SIZE A4	PRODUCT NO. SPE-2R2R-10001